U.S. DEPARTMENT OF ENERGY | Energy Efficiency & Renewable Energy

PoE Lighting System Energy Reporting Study Part 1

February 2017

Prepared for:

Solid-State Lighting Program
Building Technologies Office
Office of Energy Efficiency and Renewable Energy
U.S. Department of Energy

Prepared by:

Pacific Northwest National Laboratory

PoE Lighting System Energy Reporting Study Part 1

Prepared for:

Solid-State Lighting Program
Building Technologies Office
Energy Efficiency and Renewable Energy
U.S. Department of Energy

Prepared by:

Pacific Northwest National Laboratory

February 2017

Authors:

Jason Tuenge
Michael Poplawski

DISCLAIMER

This report was prepared as an account of work sponsored by an agency of the United States Government. Neither the United States Government nor any agency thereof, nor Battelle Memorial Institute, nor any of their employees, makes **any warranty, express or implied, or assumes any legal liability or responsibility for the accuracy, completeness, or usefulness of any information, apparatus, product, or process disclosed, or represents that its use would not infringe privately owned rights**. Reference herein to any specific commercial product, process, or service by trade name, trademark, manufacturer, or otherwise does not necessarily constitute or imply its endorsement, recommendation, or favoring by the United States Government or any agency thereof, or Battelle Memorial Institute. The views and opinions of authors expressed herein do not necessarily state or reflect those of the United States Government or any agency thereof.

PACIFIC NORTHWEST NATIONAL LABORATORY
operated by
BATTELLE
for the
UNITED STATES DEPARTMENT OF ENERGY
under Contract DE-AC05-76RL01830

Printed in the United States of America

Available to DOE and DOE contractors from the
Office of Scientific and Technical Information,
P.O. Box 62, Oak Ridge, TN 37831-0062;
ph: (865) 576-8401
fax: (865) 576-5728
email: reports@adonis.osti.gov

Available to the public from the National Technical Information Service
5301 Shawnee Rd., Alexandria, VA 22312
ph: (800) 553-NTIS (6847)
email: orders@ntis.gov <http://www.ntis.gov/about/form.aspx>
Online ordering: http://www.ntis.gov

This document was printed on recycled paper.
(8/2010)

Executive Summary

The replacement of today's lighting infrastructure with LED products offers the potential for future connected lighting systems (CLS) that could become a data-collection platform that enables greater energy savings in buildings and cities. Such connected lighting systems can not only drastically improve the energy performance of lighting and other building systems, but also enable a wide array of services, benefits, and revenue streams that would enhance the value of lighting systems.

As LED technology matures, maximizing the energy savings from connected LED lighting systems will become increasingly dependent on successful integration into the built environment. That's why the DOE Solid-State Lighting (SSL) Program is working closely with industry to identify and collaboratively address the technology development needs of CLS. For several years now, a growing number of wired and wireless network communication technologies have been integrated into commercially available lighting devices. While most commercially available lighting devices continue to require line-voltage AC power, a few new low-voltage DC technologies have also been introduced into the market as options for powering LED devices. More recently, a technology that has long supported non-lighting applications has become increasingly viable for LED lighting. This approach, whereby a single Ethernet cable is used to both provide low-voltage DC power and enable network communication, is generally referred to as Power over Ethernet (PoE).

Whereas wireless solutions offer reduced control system installation cost relative to traditional low-voltage alternatives, PoE technology can offer additional cost savings by transmitting power and communications over the same low-voltage cable, while also reducing demand for wireless bandwidth. Although PoE technology was introduced at the start of this century, it was initially of limited applicability to lighting systems due to power transmission limits for available Ethernet cabling. However, PoE has become increasingly viable for lighting applications in recent years as Ethernet cabling technology has evolved and relevant standards and specifications have adapted. These gains have been compounded by ongoing improvements to the luminous efficacy of LED technologies, increasing the number of LED luminaires suitable for use with Ethernet switches capable of sourcing PoE. As a result, a growing number of manufacturers have introduced PoE lighting systems in recent years.

Connected lighting systems that can report their own energy consumption can deliver increased energy savings over conventional lighting solutions by facilitating data-driven energy management. PoE technology has the potential to be key in bringing this capability to mainstream lighting applications. This study is the first of a multi-part effort to explore the energy reporting capability of commercially-marketed PoE connected lighting systems. It first provides a brief background on the development of the various PoE technologies, ranging from standards-based to proprietary, and illustrates the convergence of PoE power sourcing capabilities and LED luminaire power requirements. It then classifies PoE system devices in relationship to how they are used in systems—introducing new terminology as needed—and briefly describes different PoE system architectures implemented by various lighting manufacturers. A discussion of existing standards and specifications that address energy reporting is provided, and existing test setups and methods germane to characterizing PoE system energy reporting performance are reviewed.

Key Findings, Recommendations, and Path Forward

Most commercially-marketed PoE lighting systems provide some level of energy reporting. Little to no detail, however, is typically provided regarding any aspect of where, when, and how energy is reported. Some minimum level of detail describing where, when and how energy is reported should be developed and adopted by manufacturers and technology providers. Industry might develop such detail as a recommended practice, perhaps with assistance from DOE.

Energy loss in PoE cables and connections is not typically being accounted for explicitly in energy reporting. Recommended practices should be developed to limit cable losses, especially for installations where they are not explicitly reported. DOE is considering designing and executing a study to characterize the impact of cable and connector losses on example PoE system architectures, and to verify that any developed recommended practices achieve their stated goal.

At this time, DOE is not aware of any commercially-marketed PoE lighting devices or systems with formal energy reporting performance claims. Some minimum level of detail describing how energy is reported should be developed and adopted by manufacturers and technology providers. This detail should include energy reporting performance, including accuracy and precision, as characterized per industry standards and specifications. Standards or specifications describing test setups, test methods, and performance classes suitable for characterizing the energy reporting performance claims of PoE and other connected lighting devices and systems should be identified, or developed, as necessary, so that competing claims (e.g., for different devices and systems, or from different manufacturers) can be easily and fairly compared.

While a number of existing test methods for characterizing energy reporting performance are to some extent suitable for PoE lighting devices and systems, none of them appear completely sufficient in practice. Stakeholders who are experienced in the characterization of energy reporting performance should contribute to and review any test setups and methods included in standards and specifications being developed by appropriate organizations. Stakeholders who use or might use energy data should contribute to and review any performance classes included in standards and specifications being developed by appropriate organizations. DOE is currently engaged in this work.

Lighting industry stakeholders should encourage standard and specification development organizations to coordinate existing and new activities, consolidate competing activities, minimize overlap, and otherwise strive to efficiently develop and maintain test setups, methods, and performance classes for characterizing energy reporting performance that are appropriate for PoE and other lighting devices and systems.

Many physical (e.g., cabling, network architecture), logical (e.g., information/data models), and temporal (e.g., network volume, traffic) differences among PoE lighting systems might need to be addressed when characterizing energy reporting performance. DOE is not aware of any rigorous, independent, publically-available studies characterizing the reporting accuracy and precision of commercially-marketed PoE lighting devices and systems. DOE is considering whether or not to design, execute, and publish one or more studies characterizing the reporting accuracy and precision of multiple commercially-marketed PoE lighting devices and systems comprising one or more possible PoE system architectures. DOE is also considering whether or not to utilize internally-developed test setups and test methods for characterizing energy reporting performance claims, and leverage lessons learned during the execution of these studies to modify or improve its test setups and methods.

Acknowledgements

The authors are grateful to the following individuals for the input they provided to this study.

Chad Jones	—	Cisco Systems
Jason Potterf	—	Cisco Systems
Gary Trott	—	Cree
Dwight Stewart	—	Igor
Harry Aller	—	Innovative Lighting
Robert Hick	—	Leviton
John Seger	—	Leviton
Chris Gobok	—	Linear Technology
Heath Stewart	—	Linear Technology
Derek Cowburn	—	LumenCache
Don Barnetson	—	Lunera
Brian Lennan	—	MHT Lighting
Giovanni Frezza	—	Molex
Chris Isaacson	—	NuLEDs
Lisa Isaacson	—	NuLEDs
Rahul Shira	—	Philips Lighting
Lennart Yseboodt	—	Philips Lighting
Joe Deckard	—	Platformatics
Pete Johnson	—	Sifos
Gus Pohl	—	Silvertel
Michael Shulman	—	UL

The Energy Department is interested in feedback or comments on all aspects of this study. Please write to DOE.SSL.UPDATES@ee.doe.gov and include the study title in the subject line of your email.

Symbols and Abbreviations

A	Ampere(s)
AC	Alternating current
ANSI	American National Standards Institute
API	Application programming interface
ASTM	American Society for Testing and Materials
ATIS	Alliance for Telecommunications Industry Solutions
CMS	Central management system
CoAP	Constrained Application Protocol
DC	Direct current
DCR	DC resistance
EPS	External power supply
Hz	Hertz
ICEA	Insulated Cable Engineers Association
IEC	International Electrotechnical Commission
IEEE	Institute of Electrical and Electronics Engineers
IETF	Internet Engineering Task Force
IoT	Internet of Things
IP	Internet Protocol
ISO	International Organization for Standardization
kWh	Kilowatt-hour(s)
LAN	Local area network
LLDP	Link Layer Discovery Protocol
LNE	Large network equipment
LPS	Limited power source
MIB	Management information base
MPS	Maintain power signature
NEC	National Electrical Code
NEMA	National Electrical Manufacturers Association
NFPA	National Fire Protection Association
NTP	Network Time Protocol
Ω	Ohm(s)
PD	Powered device
POE, PoE	Power over Ethernet
POE+	Power over Ethernet plus
POH	Power over HDBaseT
PSE	Power sourcing equipment
RFC	Request for comments
SNE	Small network equipment
SNMP	Simple Network Management Protocol
TBD	To be determined
TIA	Telecommunications Industry Association
UL	Underwriters Laboratories
UPOE	Universal Power Over Ethernet
V	Volt(s)
VLAN	Virtual local area network
W	Watt(s)

Table of Contents

Executive Summary iii

Symbols and Abbreviations 6

1 Introduction 8

2 PoE Background 9

3 PoE Connected Lighting Systems 13

3.1 LED Luminaire Input Power 14
3.2 System Architectures 15
3.3 System Manufacturers 17

4 PoE System Energy Reporting Characteristics 20

4.1 IEEE and IETF 23
4.2 Cisco EnergyWise 24
4.3 IETF EMAN Working Group 25
4.4 IETF CoRE Working Group 26

5 Characterizing PoE System Energy Reporting Accuracy 26

5.1 Measuring Electrical Energy 27
5.2 Measuring Electrical Power 28
5.3 Measuring Cable Resistance 30

6 Recommendations 31

Appendix A — Lighting Manufacturer Literature Excerpts 37

References 59

1 Introduction

Advanced lighting control systems using dedicated low-voltage cables to transmit lighting control signals (e.g., implementing DALI or DMX) were commercially available years before the introduction of LED lighting systems for general lighting applications, but they have realized only limited market penetration and energy savings in North America—largely due to their high real or perceived cost, complexity, and various performance issues (e.g., occupant satisfaction). LED technology has drastically reduced the cost barrier of high-performance dimming, and for the first time enabled color tuning for myriad applications beyond theatrical lighting. Connected LED lighting systems—comprised of intelligent LED luminaires with one or more network interfaces and one or more sensors—can become platforms for the collection of data relevant to their surrounding environment. Such data is the fuel that is powering emerging Internet of Things (IoT) capabilities (e.g., space utilization, location services), and delivering it can add significant value to lighting systems, potentially overcoming past cost and complexity barriers for the adoption of advanced lighting controls.

The use of wireless communication technologies (e.g., via Bluetooth or Wi-Fi) to enable connected LED lighting systems has become increasingly common in recent years. Although luminaires in these systems typically receive line-voltage alternating-current (AC) power, there has been growing interest in systems powered by low-voltage direct current (DC), such as those developed by members of the EMerge Alliance, which can offer reduced AC-DC power conversion losses and installation costs among other potential benefits. Power over Ethernet (PoE) technology offers the ability to provide both low voltage DC power and communication over a standard Ethernet cable—also referred to as a local area network (LAN) cable or Category cable.

PoE technology offers intriguing contrasts with wireless approaches for lighting systems. While mobile devices inherently require wireless technologies, general lighting devices typically have fixed locations where they are powered by line or low-voltage. The primary benefit of wireless technology for lighting (and other building devices) is reduced installation costs—particularly in retrofits—resulting from not having to run new wire to carry control signals and other data. PoE technology has the benefit of carrying power and data over a single cable, and reducing demand for wireless communication bandwidth. However, in existing buildings, this likely involves running new cable, as very few existing lighting installations have Ethernet cable running to lighting devices. Further, the power that can be delivered to an end-use device, such as a luminaire, by PoE technology has been limited to levels below what most common lighting devices require. LED technology has reduced the power required for lighting applications, and recent advances in PoE technology have yielded substantial increases in the amount of power that can be delivered to a networked device over a single cable. As a result, PoE technology is emerging in lighting and many other applications beyond its historical foothold in telephony and networking equipment. A significant number of major LED manufacturers have introduced PoE connected lighting systems in the past year, with more promising to announce in the near future, making this a potentially disruptive technology.

PoE technology has long delivered and touted energy management as one of its primary capabilities. Granular data on energy usage can be reported and used to manage installed systems so as to minimize energy consumption and associated operating costs. Over time, historical data can become a valuable resource for informing and justifying the subsequent installation of other identical or similar systems. The accuracy of reported energy use is an important component of energy management and other uses of energy data. Some but not all PoE systems provide some indication of

their energy reporting accuracy. However, the applicability of and confidence in these values is not always clear. For example, energy use data for a device (e.g., luminaire) reported by its power source may have originated at the power source, or it may have been originally reported by the device, and it may include or exclude cable losses. Furthermore, whereas some reported energy use data may be derived from direct physical measurements, other data may be based on stored nominal values. Existing standard test methods for characterizing the energy reporting accuracy of electric utility meters used for generating customer bills are in many ways not applicable, or readily adaptable to PoE devices or systems, or end-use devices (e.g., lighting) in general.

Connected lighting systems that can report their own energy consumption have the potential to deliver significant energy savings by facilitating data-driven energy management. PoE technology has the potential to be key in bringing this capability to mainstream lighting applications. This study is the first of a multi-part effort to explore the energy reporting capability of commercially available PoE connected lighting systems, aiming to benefit industry in the following ways:

- increased transparency regarding accuracy and applicability of energy data reported by PoE systems;
- increased prevalence of energy reporting, whether via PoE or other means;
- increased lighting industry awareness and understanding of the diversity/complexity and benefits/limitations of PoE connected lighting systems and standards; and
- improved IT industry understanding of lighting needs.

While this report does not include actual testing of PoE devices or systems, subsequent studies might, for example, explore test and measurement setups and methods for accuracy characterization, evaluate the impact of product selection on system energy consumption for a particular PoE system component (e.g., Ethernet cables), and/or evaluate the energy reporting accuracy for complete PoE lighting systems. Evaluations of real-world systems might compare the observed energy performance against manufacture claims, as well as the observed energy performance variation across similar devices and systems.

2 PoE Background

The Institute of Electrical and Electronics Engineers (IEEE) published "Ethernet" Standard 802.3 in 1985 to harmonize specifications for the physical and lower software layers for wired Ethernet, thereby providing a backbone for local area networking (IEEE 1985).[1] Ethernet has since continued to evolve, delivering increasingly higher bandwidth speeds, a variety of physical media, and new features like PoE. The first Ethernet switches—also called bridges—had one or more ports that each provided two-way network communication with a device at the other end of an Ethernet cable (or multiple Ethernet cables in series). Devices connected through Ethernet switches in this manner created LANs. PoE switches introduced the ability to simultaneously source both power and two-way network communication over the same Ethernet cable.[2] A timeline of important PoE-related IEEE standard publications is shown in Figure 2.1.

[1] See http://standards.ieee.org/events/ethernet/history.html for details.
[2] The term "Ethernet cable" is used herein in lieu of the terms "LAN cable" and "Category cable."

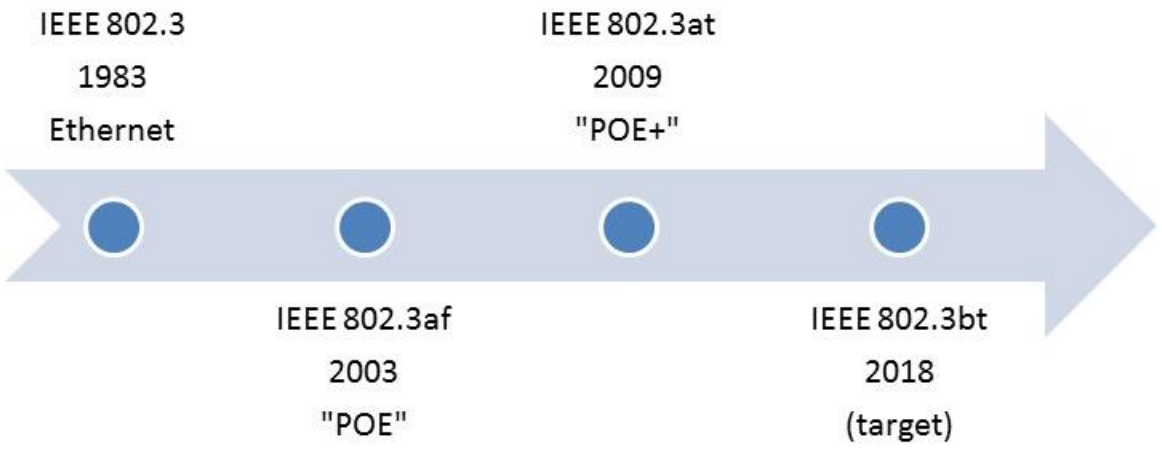

Figure 2.1 Timeline of PoE-related IEEE standards

The first meeting of an IEEE 802.3 study group exploring PoE was held in March 1999, and work transitioned to the IEEE P802.3af task force in January 2000.[3] Cisco Inline Power (ILP) was launched in 2000, and Ethernet switches supporting this proprietary technology were capable of sourcing 7.0 W per port (Cisco 2004). In June 2003 this capability was reflected in the requirements for Class 2 power sourcing equipment (PSE) in IEEE 802.3af-2003, which also introduced a Class 3 PSE classification with a minimum capability of 15.4 W, as shown in Table 2.1 (IEEE 2003). Notably, it essentially defined a PSE as an Ethernet switch port that sources power to a powered device (PD). Although not defined or otherwise used in the document, the terms "POE" and "Power over Ethernet" were included in its list of Keywords.[4] 802.3af was later incorporated in Clause 33 of the 2005 and 2008 editions of IEEE 802.3.

The first meeting of the IEEE 802.3 "Power over Ethernet plus" study group was held in November 2004, and work transitioned to the IEEE P802.3at Power over Ethernet plus task force in September 2005. Cisco Enhanced POE was launched in 2008, and PoE switches supporting this proprietary technology were capable of sourcing up to 20 W per port (Cisco 2008). In September 2009, IEEE 802.3at-2009 introduced a higher performing Class 4 PSE echelon with a minimum capability of 30.0 W (IEEE 2009). Although not defined or otherwise used in the document, the terms "POE+" and "Power over Ethernet plus" were included in its list of Keywords. 802.3at was later incorporated in Clause 33 of the 2012 and 2015 editions of IEEE 802.3 (IEEE 2015a).[5]

In addition to incorporating content from previous versions and intervening amendments, IEEE 802.3-2015 makes use of material published in other documents. For example, it references American National Standards Institute (ANSI) standards developed by the Telecommunications Industry Association (TIA) for Category 5 or better balanced twisted-pair telecommunications

[3] The "P" prefix in "P802.3af" indicates the document is a draft standard in progress. Websites for IEEE 802.3-series study groups and task forces can be found at http://www.ieee802.org/3/.
[4] To avoid confusion, this report uses the term "802.3af" (rather than "POE" or "PoE") when specifically referring to IEEE 802.3af-2003, and uses the mixed-case "PoE" abbreviation more broadly.
[5] An overview of recent revisions is provided at http://www.ieee802.org/3/status/index.html.

cabling.[6] It also references International Electrotechnical Commission (IEC) Standard 60603-7 (IEC 1990) for specific 8-pin 8-contact (8P8C) modular connectors, commonly referred to as RJ45 jacks (i.e., receptacles) and plugs, which are illustrated in Figure 2.2.[7]

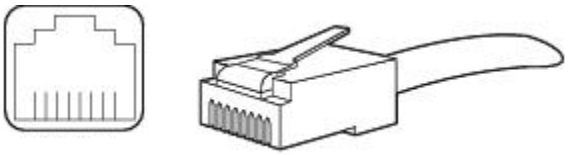

Figure 2.2 RJ45 jack (left) and plug (right). Image credit: Cisco.

The 802.3af and 802.3at standards both specified use of two pairs of conductors in a 4-pair Ethernet cable to source power, and this requirement was retained in IEEE 802.3-2015 (e.g., in subclauses 33.2.3 and 33.3.1). However, at least one manufacturer has interpreted 802.3at as permitting simultaneous use of all four pairs to source up to 60 W per PSE port (Microsemi 2011). Higher-power proprietary alternatives to 802.3at were introduced as early as 2010, achieving the higher wattages in part by utilizing all four pairs of conductors to source power. In 2011, Cisco launched PoE switches supporting its Universal Power over Ethernet (UPOE) specification that are capable of sourcing up to 60 W per port (Cisco 2014).[8] Around the same time, PoE switches supporting the HDBaseT Alliance's Power over HDBaseT (POH) industry standard and capable of sourcing up to 100 W per port entered the market (HDBaseT 2011). At present, Microsemi and Silver Telecom (Silvertel) both offer nominally POH-compliant power sourcing technologies. Products capable of sourcing 60 W or more per port but not rated as UPOE or POH-compliant are also offered by Silvertel (branded "PoE Ultra" and "Ultra PoE") and Linear Technology (branded "LTPoE++").

802.3at specifies that a PSE shall be classified as a Limited Power Source (LPS) in accordance with IEC 60950-1, which effectively limits the power sourced from a PSE port to 100 W (Shulman 2015). Some PoE systems, however, are capable of exceeding this 100 W limit. For example, some PoE switches utilizing Linear Technology's LTPoE++ technology are capable of sourcing as much as 133 W per port (Stewart 2011). Similarly, Silvertel markets technologies capable of sourcing as much as 230 W per port (branded "PoE Ultimate" and "Ultimate PoE"), but notes that a different type of cable or two cables in parallel would be required to source up to 200 W in the U.S. (Silvertel 2012).

The term "Power over LAN" is sometimes used to broadly capture the various types of PoE technologies, 802.3-compliant and otherwise (UL 2015c). Although many PoE technologies are nominally based on or backwards-compatible with one or more PoE standards and specifications, some compatibility issues have been reported (Sifos 2016b, Carlson 2014). Underwriters Laboratories (UL) "Low Voltage Lighting Systems" Standard 2108 generically references IEEE 802.3 to include both existing and future generations of the standard, but does not currently address other Ethernet cable-based protocols such as POH (Shulman 2015, UL 2015b). Meanwhile, the

[6] The term "cabling" refers to one or more cables with connecting hardware (i.e., connectors).
[7] Notably, a given modular connector type can be used for different registered jack (RJ) connections (IEEE 2016d).
[8] The term "standard" is reserved herein for industry-consensus protocols, and the term "specification" is used for proprietary protocols.

HDBaseT 5Play (HDBT5) working group was given approval in late 2014 to begin work on IEEE 1911, which will include POH (IEEE 2015c).

The first meeting of the IEEE 4-Pair Power over Ethernet (4PPoE) study group was held in March 2013, and work transitioned to the IEEE P802.3bt task force in December 2013. The scope of the project includes augmenting the capabilities of 802.3at with 4-pair power and associated power management information, while maintaining backwards-compatibility (Law 2016b). Goals include support for increased power levels, enhanced power management, reduced cost, and improved efficiency (IEEE 2016a). The new standard is expected to support a minimum of 49 W at the PD, while continuing to comply with the 100 W limit for LPS (IEEE 2013a); intermediate limits are to be determined. Final ratification is targeted for early 2018 (Law 2016a), and a number of manufacturers have already introduced products marketed as complying with P802.3bt.

Table 2.1 IEEE 802.3-series standards overview

IEEE Standard	802.3-2015 Clause 33* (incorporates 802.3at-2009)		P802.3bt (in progress)	
Category	Type 1	Type 2	Type 3	Type 4
Number of conductor pairs carrying power for highest Class in Type	2	2	4	4
Channel maximum *pair loop* DC resistance †	20.0 Ω	12.5 Ω	TBD ≤ Type 2	TBD ≤ Type 3
Maximum *pair* DC current ‡	0.350 A	0.600 A	TBD ≥ Type 2	TBD ≥ Type 3
PSE port DC voltage	44.0 to 57.0 V	50.0 to 57.0 V	TBD ≥ Type 2	TBD ≥ Type 3
Minimum PSE port power capability for highest Class in Type §	15.4 W (Class 0 or 3)	30.0 W (Class 4)	Type 2 < TBD < Type 4	Type 3 < TBD < 100 W
PD port DC voltage	37.0 to 57.0 V	42.5 to 57.0 V	TBD ≥ Type 2	TBD ≥ Type 3
Maximum PD port power for highest Class in Type §	13.0 W (Class 0 or 3)	25.5 W (Class 4)	Type 2 < TBD < Type 4	Type 3 < TBD < 100 W

* Type 1 (Classes 0-3) requirements were introduced in 802.3af and retained in 802.3at, which introduced Type 2 (Class 4) requirements.
† Whereas "loop" refers to two conductors effectively wired in series (from PSE to PD and back to PSE), "pair loop" refers to two such loops wired in parallel (IEEE 2016c).
‡ Refers to the current sourced on one twisted pair of conductors; a second twisted pair is required to return current in the opposite direction (UL 2015a).
§ Refers to top of capability range for highest Class in Type. Can operate at lower values.

IEEE 802.3-2015 provides definitions for a number of terms in Clause 1. The term "channel" only referred to a band of transmitted frequencies, but this definition was amended in IEEE 802.3by-2016 to also refer to the data signal path.[9] This aligned with usage in Clauses 40 and 55, which are

[9] See http://www.ieee802.org/3/status/index.html for an overview of recent and forthcoming 802.3 amendments.

referenced in Clause 33 and state that the "link segment" between Ethernet switch and device is comprised of four duplex channels.

In contrast, the term "channel" as used when describing resistance requirements in Table 33-1 of IEEE 802.3-2015 corresponds to the term "link section," which refers to the electrical path on which power is transferred from PSE to PD (IEEE 2016b). This usage appears to differ from usage in subclause 33.4.9, which states that per ANSI/TIA-568-C.0 and ISO/IEC 11801 the "channel" cannot exceed 100 meters in length. This language is similar to language in sections 25.4.9.2 and 40.7.2, where the 100-meter limit is instead applied to the term "link segment," which in Clause 33 refers to the connection between the interfaces at each end of the electrical transmission medium (i.e., cabling) between an "Endpoint" PSE and PD.

Subclause 33.1.3 of IEEE 802.3-2015 establishes that a PSE located at the end of a link segment is an Endpoint PSE; it also permits an alternative approach, whereby a "Midspan" PSE is inserted as a connector along the link segment between a non-PoE Ethernet switch and a PD. Although the link segment and link section are equivalent for a PD sinking power from an Endpoint PSE, these terms are not equivalent for a PD sinking power from a Midspan PSE, as shown in Figure 2.3.

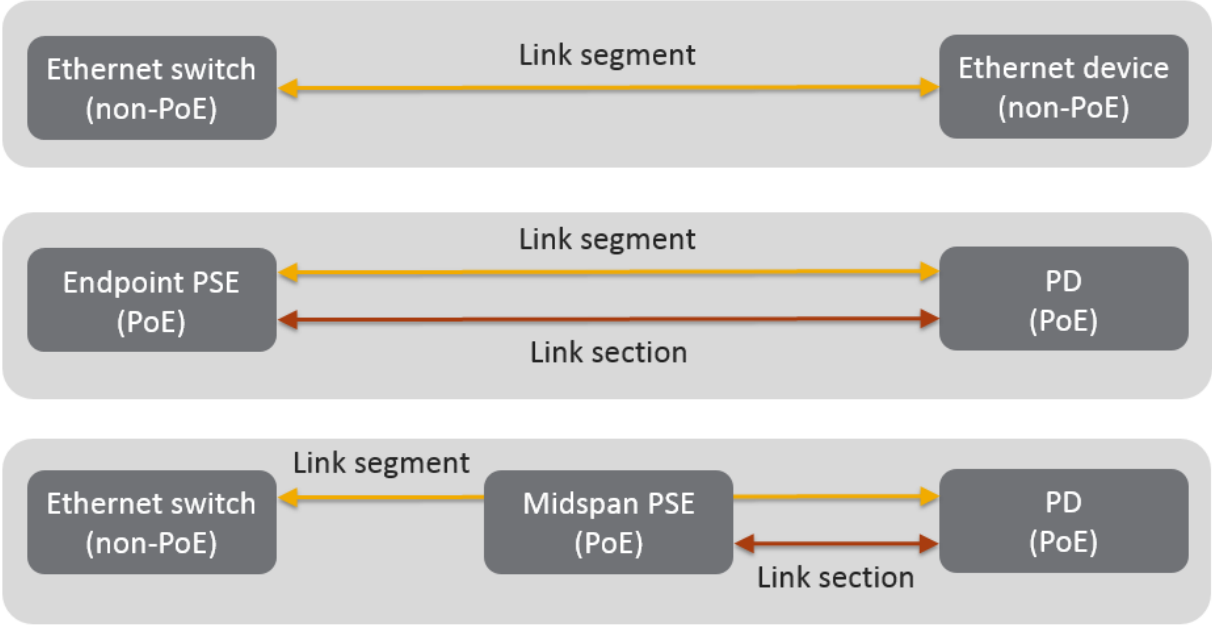

Figure 2.3 Link segment and link section in different PoE and non-PoE configurations

3 PoE Connected Lighting Systems

PoE technology was initially developed to power low-wattage communication devices such as Internet Protocol (IP) phones and wireless access points; most luminaires exceeded the early PoE power limits. However, two concurrent and complementary processes have led to the increasing viability of PoE in general lighting applications. First, each new generation of PoE standards and technologies has accommodated loads of increasingly higher power. Second, luminous efficacy

(lumens output per watt input) has been improving with each new generation of LED lighting devices. The net effect is that a growing number of LED luminaires already or will soon have input power requirements within commercially available PoE limits. Notably, the 2016 Progress Report of the Illuminating Engineering Society (IES) was the first edition to use the term "Power over Ethernet" (IES 2017).

3.1 LED Luminaire Input Power

On February 22, 2017, there were 45,821 luminaires in the LED Lighting Facts® database,[10] of which 22,429 were classified as indoor luminaires. The 25.5 W limit in 802.3at would be sufficient for 24% of the indoor luminaires and 21% of all luminaires—including outdoor luminaires. Similarly, the 49 W minimum in P802.3bt would be sufficient for 50% of the luminaires, and 71% of indoor luminaires would be supported if the upper limit for PD input power was set at 71 W (Ethernet Alliance 2016). In addition to enabling the development of higher-output PoE luminaires (at currently achievable luminous efficacy), P802.3bt promises to extend the capability of powering more than one lower-output luminaire from each port.

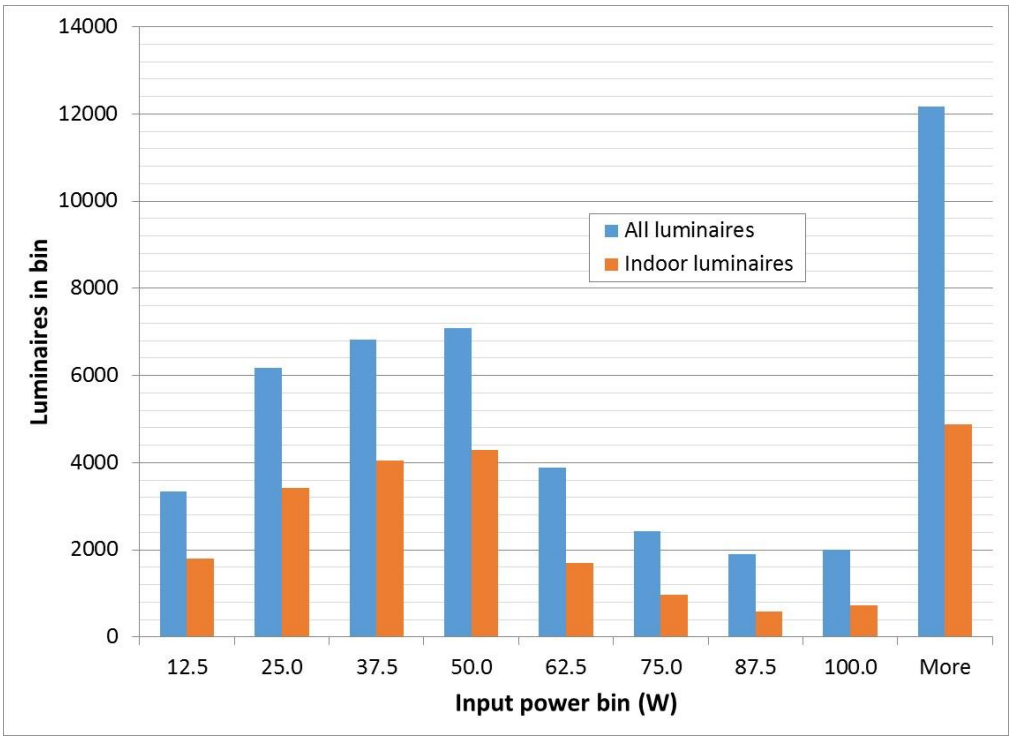

Figure 3.1 Histogram of luminaires in the LED Lighting Facts database

The median input power for LED Lighting Facts luminaires is 49 W. It may already be possible to support this load within 802.3at power limits by using two 25 W LED drivers, each acting as a Class

[10] Accessible online at http://www.lightingfacts.com.

4 PD.[11] Although this would enable completely independent control of, in this example, two separate LED modules (e.g., one for uplight, one for downlight in a direct-indirect application) within the luminaire, any resultant benefits would be offset by increased cost and complexity, as each driver requires its own Ethernet cable and dedicated PSE port.

3.2 System Architectures

While most installed PoE systems are comprised of PSEs and PDs that operate within IEEE 802.3at limits, some—most notably those already using 4-pair power via Cisco UPOE devices—are not. Components that operate outside IEEE 802.3at limits may not strictly fit IEEE definitions for PSE or PD. As a result, the variety of viable PoE system architectures that might be installed today goes beyond those comprised of networks connecting PSEs to PDs. To facilitate system architecture comparisons, while avoiding confusion with IEEE terminology, the following terms are used herein:

- PoE system—a system in which end-use devices (e.g., luminaires) receive all normal input power via Ethernet cabling from a PoE switch, functioning either as direct PoE loads or as indirect PoE loads; emergency power may be provided separately via energy storage device.
- PoE controller—equipment that must be directly connected to one or more networked PoE switches for communication via Ethernet cabling for proper PoE system operation (e.g., to enable energy reporting); often referred to as a gateway, and in some cases serving or capable of serving as one (i.e., providing an interface between systems using different communication protocols).
- PoE switch—equipment capable of providing power and two-way communication to IEEE 802.3-compliant PDs via Ethernet cabling; some PoE switches extend IEEE functionality (e.g., Cisco UPOE-compliant switches support higher power devices but remain backwards-compatible).
- Direct PoE load—a device that receives power and two-way communication from a PoE switch directly over Ethernet cabling, possibly with intermediate patch panel connections; lighting system examples can include sensors, luminaires, and LED drivers; some direct PoE loads can provide power and two-way communication to one or more indirect PoE loads via Ethernet cables or other means.
- Indirect PoE load—a device that receives power from a PoE switch indirectly via a direct PoE load; lighting system examples can include sensors and luminaires.
- Sensor—a device that generates data based on some measurement or detection from its surrounding environment; examples include photosensors (which measure or detect changes in light level), motion sensors (which detect new motion in a given field of view), wall-box dimmers (which measure or detect human input intended to initiate a change in light level), and smartphones (which contain myriad environmental sensors, and whose location generally is linked to its owner).

Subclause 33.3.7 of IEEE 802.3-2015 states that when a local power source is provided, the PD may draw some, none, or all its power from the power interface (i.e., the port used to source power from the PSE). For the purposes of this report, it is assumed that all normal power for direct PoE loads will be sourced from the PoE switch; emergency power may be delivered by other means (e.g., via internal battery).

[11] Section 725.121(B) of the 2017 National Electrical Code (NEC) addresses paralleled or otherwise interconnected output connections from NEC Class 2 power sources (as distinct from IEEE Class 2 PSEs).

An example of a possible PoE lighting system architecture is shown in Figure 3.2 to illustrate the application of these terms and to facilitate discussion of commercially marketed PoE connected lighting systems. Many variations in architecture are possible:

- Inclusion of a PoE controller might be required.
- Energy management functions might be performed by the PoE controller and/or by a central management system (CMS) that also provides, for example, building or asset management functions.
- Energy management functions and data might be accessed indirectly, via the cloud, or via direct connection to a virtual LAN (VLAN) comprising the networked PoE switches and other PoE lighting system devices.
- Personal control of luminaires might be provided via smartphone apps and other personal devices (which might also function as sensors); in such scenarios control permissions are generally limited, and for security reasons access is typically only via the VLAN.
- One or more indirect PoE loads may sink power from a direct PoE load to maximize PoE switch loading, which typically maximizes PSE efficiency. The use of indirect PoE loads also limits the number of PoE switch ports required to implement a given PoE system. Notably, non-Ethernet cabling is sometimes used to provide power from direct PoE loads to indirect PoE loads with the intention of preventing direct connection of indirect PoE loads to PoE switches; systems that use Ethernet cabling to source power for indirect PoE loads may be designed for compatibility with 802.3 to ensure that improper installation does not damage equipment or create safety issues.
- Indirect PoE loads may be connected to direct PoE loads in series, or in parallel, depending on the technology utilized.

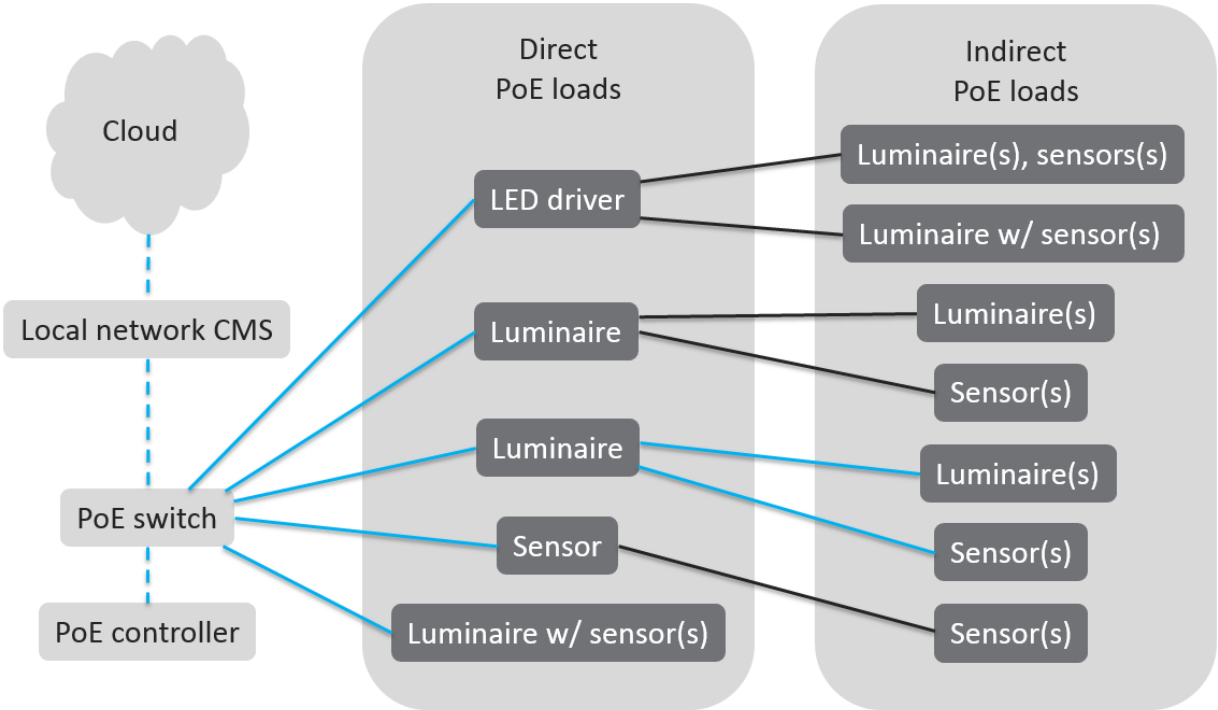

Figure 3.2 Example PoE lighting system. Dashed blue lines indicate Ethernet cabling not used to source power. Solid blue lines indicate Ethernet cabling used to source power. Black lines indicate non-Ethernet low voltage cabling used to source power.

3.3 System Manufacturers

A number of PoE lighting systems—herein limited to those in which luminaires receive all normal input power directly or indirectly from a PoE switch—introduced prior to publication of this report are summarized in Table 3.1 and discussed in the paragraphs that follow, in rough chronological order of market introduction. Relevant excerpts from manufacturer literature, press releases, and magazine articles are compiled in Appendix A for reference.

Table 3.1 Summary of PoE lighting systems

Manufacturer		Cree	Igor	Innovative Lighting	LumenCache	MHT Lighting	Molex	NuLEDS	Philips	Platformatics	Redwood/CommScope
Energy management access	Direct via VLAN	✓						✓	✓		✓
	Indirect via router	✓	✓	✓		✓	✓		✓	✓	✓
PoE controller	Required		✓		✓	✓	✓		✓	✓	✓
	Optional	✓						✓			
PoE switch	802.3af		✓				✓				
	802.3at	✓	✓	✓		✓	✓	✓	✓		
	UPOE	✓	✓	✓		✓	✓	✓		✓	
	Other				✓						✓
Direct PoE loads	LED drivers		✓	✓			✓	✓			
	Luminaires	✓	✓		✓	✓	✓	✓	✓	✓	
	Sensors	✓	✓		✓				✓		✓
	Luminaires w/ sensors	✓	✓			✓	✓	✓	✓		✓
Cabling to indirect PoE loads	Ethernet		✓	✓	✓	✓		✓			✓
	Non-Ethernet					✓	✓	✓		✓	✓

Redwood Systems introduced a connected lighting system in 2010 featuring a line-voltage AC "engine" that communicated with an Ethernet switch via Ethernet cable, similar to a 802.3 Midspan PSE (LEDs Magazine 2010),[12] and the ability to report on energy consumption. However, this 1st generation engine did not provide power and two-way communication to a direct PoE load via Ethernet cabling; instead, constant-current regulated power was sourced from the engine via two-conductor cables that also facilitated communication between the engine and its lighting loads (Redwood Systems 2010). The 2nd generation engine could be configured to source power and communication over Ethernet cabling by way of a Redwood multi-cable "patch cord" between the engine and a Redwood "patch panel" (Redwood Systems 2012). In 2013 CommScope acquired Redwood Systems and launched the 3rd generation engine, featuring RJ45 ports that obviated the patch cords but still required an intermediate patch panel for the engine to serve as a PoE switch (Redwood Systems 2013). In 3rd generation systems, the engine powered either "gateways" or "adapters" as direct PoE loads. The adapters, which were intended to enable LED luminaires to be powered by and communicate with engines, combined a gateway with a sensor cluster that reported on a variety of environmental parameters (e.g., light level, temperature, occupancy, and energy consumption). Indirect PoE loads (luminaires or sensor clusters) sinked power from direct PoE loads via Ethernet or non-Ethernet cabling. A "director" served as the PoE controller. CommScope discontinued the Redwood product line in early 2016.[13]

[12] Note that "LED light engine" is defined and used differently in IES RP-16-10 and IES LM-84-14, respectively.
[13] From email correspondence dated January 4, 2017.

Having previously developed luminaires for the Redwood Systems platform (Warren 2011), Lunera developed its "PowerHive" system in 2012.[14] The PowerHive "Power Distribution Control Unit" provided power (normal and battery) and dimming control (either 0-10 V or Lutron EcoSystem) to luminaires via Ethernet cabling (Lunera 2013). However, the system was later withdrawn from the market by Lunera.

LumenCache introduced a hardware platform for PoE and other low-voltage systems in 2012 (Jacobson 2012). The platform is not specifically described as PoE but can provide power and communication to luminaires and sensors over Ethernet cabling. The LumenCache "power distribution module" can serve as a PoE switch once it is populated with "card modules" by one or more partner developers. Alternatively, these card modules can be non-PoE LED drivers or source power via Universal Serial Bus (USB). Per email correspondence with the manufacturer, the "power management module" monitors the power distribution modules, and gateway software can calculate energy usage for each device.

NuLEDs introduced a PoE lighting system in 2012 (CE Pro 2012) that only works with 802.3af, 802.3at, or UPOE switches. Direct PoE loads can include a standalone "SPICEbox" LED driver or a luminaire with an integral SPICEbox. Multiple luminaires can be connected to a SPICEbox in parallel via non-Ethernet cabling as indirect PoE loads; similarly, multiple sensors can be connected to a SPICEbox in series via Ethernet cabling as indirect PoE loads. Energy reporting granularity extends to the level of luminaires and sensors, and appears to originate at the SPICEbox.

Philips Lighting introduced a PoE lighting system in 2014 (Dewan 2014). The PoE switch must comply with 802.3at, and luminaires can only be integrated into the system as direct PoE loads; luminaire-integrated sensors are optional. The "EnvisionGateway" must be connected to the network as a PoE controller. Luminaires report energy use to the EnvisionGateway via the PoE switch. The EnvisionGateway does not receive or provide power via Ethernet cabling, but it can be used to connect non-PoE lighting systems to the network for communication via Ethernet cabling.

Igor introduced a platform for PoE lighting systems in 2014 (Briggs 2014). The PoE switch must comply with 802.3at or the UPOE specification, and Igor "Network Nodes" are direct PoE loads. Indirect PoE loads can be luminaires, sensors, or Igor "Device Nodes." Device Nodes can be connected in series to a Network Node using Ethernet cabling, and can in turn source power to and communicate with luminaires and sensors. Energy reporting granularity appears to extend to each luminaire, and appears to originate at the direct PoE loads.

Innovative Lighting introduced a PoE lighting system in 2014 (Briggs 2014), and announced updates in early 2017 (Strong 2017). The PoE switch must comply with 802.3at or the UPOE specification, and direct PoE loads are "IntelliDrive" LED drivers. Luminaires and sensors (indirect PoE loads) are connected to the IntelliDrive in parallel using Ethernet cabling, and sensors can also be connected in series. Energy use is reported separately for each IntelliDrive, luminaire, and sensor in the system.[15]

Several luminaire manufacturers introduced PoE lighting systems when Cisco launched its Digital Ceiling initiative in early 2016 (Halper 2016):

[14] From https://www.lunera.com/about/, last accessed January 1, 2017.
[15] From email correspondence February 16, 2017.

- PoE switches in Cree's Smartcast PoE lighting system must comply with 802.3at or the UPOE specification. Direct PoE loads report their own energy use, and include sensors and luminaires with integral sensors. Daisy-chaining is not permitted. The Smartcast Link is optional; the Smartcast Manager runs on a PC connected via a VLAN.
- PoE switches in Molex's "Transcend" PoE lighting system must comply with 802.3at or the UPOE specification. Stand-alone "PoE Gateways" and luminaires with integrated PoE Gateways function as direct PoE loads. The PoE Gateway can provide power and communication to one or more daisy-chained indirect PoE loads via Transcend "Harness" cabling. Indirect PoE loads include luminaires and sensors. Granularity of energy reporting extends to the luminaire level; data can originate at PoE Gateway or at a Transcend "Smart LED Driver" that features integrated power monitoring capability.
- PoE switches in PoE lighting systems by Platformatics and partner PoE Illumination must comply with the UPOE specification. "Platformatics nodes" that can be integrated into luminaires operate as direct PoE loads. Luminaires and sensors can be connected in parallel as indirect PoE loads using non-Ethernet cabling. Energy reporting granularity extends to each luminaire.

MHT Lighting developed luminaires for the Redwood System platform (MHT 2014), and recently migrated their connected products to their new "inspeXtor" system (MHT 2016). The inspeXtor "Server" acts as a PoE controller. Luminaires offered with integral sensors can be direct PoE loads, or can be daisy-chained as indirect PoE loads using Ethernet cabling. Downlight luminaires do not have integral sensors; however, multiple downlight luminaires can be wired in parallel to sink power from a single port using a MHT "wiring harness."

Eaton has partnered with NuLEDs but has not yet introduced a PoE lighting system (Wright 2016). Similarly, Hubbell presented on PoE lighting at the 2016 Northwest LED Specifier Summit but has not yet introduced a PoE lighting system (Ziegenfus 2016).

Several connected lighting systems provide power and communication over Ethernet cabling to sensors and/or other types of direct PoE loads such as wireless access points (WAPs) and other gateways, but luminaires in these systems are not direct or indirect PoE loads; these therefore are not PoE lighting systems as defined herein. Examples include Acuity's nLight system, Digital Lumens' LightRules system, Eaton's Distributed Low Voltage Power (DLVP) system, Enlighted, and Finelite's FineTune system.

4 PoE System Energy Reporting Characteristics

Energy use data reported by connected lighting systems can offer many benefits when it is provided with sufficient granularity and accuracy. For example:

- installed systems can verify that energy performance meets specifications and is maintained over time;
- installed systems can be further optimized to minimize operating costs while maintaining user acceptance;

- corresponding data on occupant behavior can be used to better understand and thereby improve space utilization, generate new revenue streams, and enable additional energy savings in other building systems; and
- demonstrated energy savings can be used to inform and justify the subsequent installation of connected lighting systems in similar facilities.

Energy management capabilities feature prominently in product literature and other publications from manufacturers of PoE lighting systems, as the excerpts in Appendix A illustrate. However, many aspects of how energy is reported by these systems are often unclear. Important considerations include:

- What exactly is reported? Energy (kWh), power (W), or both?
- How frequently can reported energy data be updated?
- How granular is the data? Is energy reported for groups of luminaires and sensors, or for individual luminaires and sensors?
- How is the data reported? What format (i.e., information model or data model) is used?
- How accurate is the reported data? What conditions affect reporting accuracy? For example, is accuracy different when luminaires are operating at reduced power versus full output?

Accuracy is often confused with related concepts such as trueness, uncertainty, error, precision, repeatability, and reproducibility; further complicating matters is the fact that a given term is sometimes used qualitatively or quantitatively (Taylor 1994). Accuracy generally describes the degree of agreement between a measurement or other estimate and the actual or true value of the measurand,[16] and is typically quantified as a percent deviation. For example, the accuracy of an electricity meter under specific test conditions can be determined by comparing its measurements to "true" measurements obtained using a calibrated reference meter known to be highly accurate (ANSI 2016a). In contrast, precision is generally used to describe the degree of agreement between multiple measurements or other estimates, without regard for the "true" value of the measurand; it is an indicator of reproducibility. Accuracy and precision are not necessarily correlated; a set of measurements can, for example, simultaneously exhibit high precision and low accuracy, as shown in Figure 4.1. A high degree of precision may not be necessary if the accuracy of a set of measurements is the primary concern.

[16] For example, see the IEC Electropedia website (http://www.electropedia.org/), last accessed January 4, 2017.

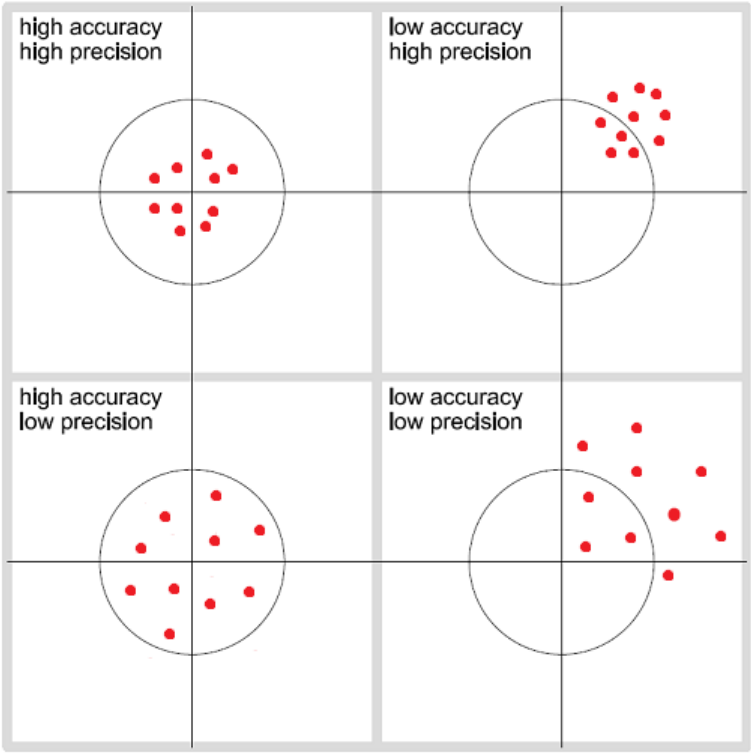

Figure 4.1 A visual representation of the difference between accuracy and precision

PoE lighting system energy reporting accuracy is largely a function of the following factors:

- The accuracy of each original source of data, which may vary with operating state and conditions (e.g., ambient temperature, input voltage, power factor, loading).
- The accurate representation of each original source of data (e.g., whether a value reported by a direct PoE load describes power sinked at its input or sourced at its output).
- The accuracy of any subsequent calculation performed by some other part of the system (e.g., the calculation of energy use from reported power data, or the aggregation of energy use from multiple devices).
- When data is aggregated, the relative significance of each original source of data (e.g., less accurate data for a relatively large and frequently used load will have a greater impact on the system accuracy than less accurate data for a relatively small and/or infrequently used load).

None of the product literature for PoE lighting systems surveyed for this report contained statements regarding accuracy of reported energy or power data. However, in email correspondence, NuLEDs estimated an accuracy of 5% for SPICEbox-reported data, but indicated that measurements are instead typically performed by the PoE switch.[17] Similarly, Microsemi has stated that PSE port power accuracy of ± 5% is generally achievable, at least for levels within 10% of the 100 W LPS limit (Darshan 2015). The ENERGY STAR program requirements for Large Network Equipment

[17] From email correspondence dated November 20, 2016.

(LNE), which can apply to PoE switches, specify that input power measurements > 200 W must be reported with ± 5% accuracy (EPA 2016a). By way of comparison, the Sifos Technologies PDA-602A is rated for power measurement accuracy of ± 2.2% ± 0.1 W over the measurement range of 0 to 56 W, with a resolution of 0.1 W (Sifos 2016a). If for example, the required accuracy for a project is ± 5% of reading, then the useful range of this instrument would be from approximately 3.6 W (0.1 W divided by the difference of 5% and 2.2%) to 56 W (full scale).

Estimates of lighting energy would ideally be accurate over the full range of operating modes, from full power down to minimum power (e.g., in standby mode or fully dimmed). IEEE 802.3at-2009 states that to maintain power, the PD must provide a valid Maintain Power Signature (MPS). Among other requirements, this entails drawing a minimum current of 10 mA for a minimum of 75 ms, followed by an optional dropout period of no longer than 250 ms. This effectively results in a minimum standby mode power of about 85 mW (for a Type 1 PD operating at 37 V and 23 percent duty cycle). Actual standby mode power will vary; for example, Molex indicates a nominal standby mode power of 0.5 W for its Transcend Gateway and Innovative Lighting indicates a nominal standby mode power of 3 W for its GENISYS Intellidrive.

Although it might then be desirable for reported PD energy use data to meet a stringent accuracy requirement for power values ranging from 85 mW (the effective minimum standby mode power for Type 1 PDs) to 100 W (the limit for LPS), a high degree of accuracy over such a wide range may be cost-prohibitive and unnecessary. For example, the accuracy of measurement for a device operating in standby mode may be unimportant if energy use in this mode represents a negligible portion of overall energy use (due to limited operation and/or relatively low power draw in this mode).

The following sections review existing standards and specifications that have been developed to address one or more energy reporting characteristics in PoE and similar networked systems.

4.1 IEEE and IETF

The 2012 edition of the IEEE 802.3 standard contains direct references to two energy-related requests for comments (RFCs) published by the Internet Engineering Task Force (IETF).[18] The "Power Ethernet MIB" RFC 3621 defined a set of objects that reside in a virtual information store—termed the Management Information Base (MIB)—through the Simple Network Management Protocol (SNMP) for management of 802.3af compliant PSEs. This document addresses power measurement (specifically to ensure the maximum threshold is not exceeded), but does not address energy measurement or accuracy and only applies to PSE ports; PD reporting is not addressed. RFC 4836 uses the cable connector interface as a proxy for a PD, and addresses basic management of PD operating state (e.g., standby). Additional MIB module definitions were incorporated by reference to IEEE 802.3.1-2011 (IEEE 2011).

The 2015 edition of the IEEE 802.3 standard still references IEEE 802.3.1 but no longer specifies the edition (year) of the document, thereby incorporating new content in IEEE 802.3.1-2013, which introduced new objects for reporting PSE port power, PSE port power measurement accuracy, and PSE port "accumulated" energy use, respectively (IEEE 2013b). These PSE attributes—aPSEActualPower, aPSEPowerAccuracy, and aPSECumulativeEnergy—are further defined in Clause 30 of IEEE 802.3-2015. No similar attributes were added for PDs.

[18] IETF RFCs are published online at https://www.ietf.org/rfc.html.

The IEEE standards do provide mechanisms for communication between PSEs (e.g., power available) and PDs (e.g., power requested) to ensure safe operation and backwards compatibility. An 802.3af or 802.3at-compliant PoE switch will recognize non-PoE devices as such and not source power to them. Similarly, a Class 3 (Type 1) PSE is only capable of sourcing power sufficient for a Class 3 (Type 1) PD; it can also source power to a Class 4 (Type 2) PD, but only for operation at or below Class 3 (i.e., reduced) power levels. 802.3at introduced approaches that can be used to provide power levels exceeding those permitted in 802.3af, depending on the PSE/PD combination. One approach uses the Link Layer Discovery Protocol (LLDP) to enable dynamic power negotiation in 0.1 W increments, thereby permitting PSEs to allocate less than the maximum power permitted for a PD of a given Class.

4.2 Cisco EnergyWise

PoE lighting system manufacturers often list nominally compatible PoE switches in product literature, as shown in Appendix A; examples include the Cisco Catalyst 3500, 3600, 3700, 3800, and 4500-series PoE switches—all of which at least partially support Cisco's "EnergyWise" energy management system (Cisco 2012). NuLEDs does not recommend any specific PoE switches, but does indicate compliance with Cisco's UPOE, and specifically references EnergyWise for network management (NuLEDs 2016). Now part of the Cisco Energy Management[19] and Asset Management[20] suites, EnergyWise can provide the ability to monitor and control power in PoE lighting systems.

Devices are categorized by EnergyWise as power consumers, power producers, or meters that do not produce or consume power. Data from a reporting device is qualitatively described by its assigned "caliber," ranging from "unknown" for data from a non-EnergyWise device to "actual" for data from a device that reports values it has measured itself (rather than using data stored or relayed from other devices).[21] Notably, "caliber" assignments do not say anything about energy reporting performance (e.g., accuracy or precision). Devices that comply with Clause 33 of IEEE 802.3 but do not support Cisco Discovery Protocol (CDP) receive an intermediate "presumed" caliber, and maximum power for the PD Class is reported in lieu of actual power usage (Cisco 2011).

Relationships in EnergyWise are indicated by the "type," which in a PoE system component is either "parent" (PoE switch input power) or "child" (PoE switch port output power). The combined power use of a parent and its children is calculated as their sum. EnergyWise can be accessed via SNMP or an Application Programming Interface (API). Cisco publishes and supports SNMP MIB modules for EnergyWise,[22] but recommends the Cisco Management API (MAPI). The EnergyWise MIB module characterizes energy usage in terms of power (W), meaning that energy (Wh) is not reported by PoE switches or direct PoE loads, but instead must be calculated elsewhere.[23]

[19] http://www.cisco.com/c/en/us/products/switches/energy-management-technology/index.html
[20] http://www.cisco.com/c/en/us/products/switches/asset-management-suite/index.html
[21] See the Online Help at https://cem-update.cisco.com/download/
[22] See ftp://ftp.cisco.com/pub/mibs or http://tools.cisco.com/ITDIT/MIBS/servlet/index
[23] ftp://ftp.cisco.com/pub/mibs/v2/CISCO-ENERGYWISE-MIB.my

After acquiring JouleX, Cisco released "TruJoule" energy management software that supports a variety of methods for reporting power draw by a given load in a given operating state, relying on either measurements or information pulled from a database.[24]

4.3 IETF EMAN Working Group

Additional SNMP MIB modules were published by the IETF Energy Management (EMAN) working group, which was active from September 2010 to June 2015.[25] Per its charter, when the working group formed, most networking and network-attached devices did not monitor or control energy usage, and were not instrumented for energy measurements; it also gave PoE as an example of a system in which energy use data may not originate at the PD but rather at the PSE.[26]

The EMAN Applicability Statement in RFC 7603 provides an overview of MIB modules and other documents published by the working group; a discussion of related models and test methods is also provided. EMAN standards-track RFCs 7460 (Monitoring and Control MIB for Power and Energy) and 7461 (Energy Object Context MIB) reference informational RFC 7326 (Energy Management Framework), which is in turn based on informational RFC 6988 (Requirements for Energy Management) and EnergyWise.

RFCs 7460 and 7461 also both reference the EMAN standards-track RFC 6933 (Entity MIB), which describes MIB objects used for managing multiple entities managed by a single SNMP agent, and gives an example EMAN application for illustration purposes. It distinguishes between physical and logical entities, and establishes conventions used to classify the former (e.g., energy objects, central processing units, sensors, ports, power supplies, and the chasses that may contain them). It also enables identification of each entity via a Universally Unique IDentifier (UUID).

Whereas RFC 3621 only addresses PSE reporting, RFC 7461 extends coverage to PDs. It also classifies power interfaces (PIs) as power inlets, power outlets, or as capable of both functions. Energy object relationships are also defined in terms of power sourcing, metering, and aggregating.

RFC 7460 distinguishes between power metering and energy metering. It characterizes performance caliber for power measurements (similar to EnergyWise), and discusses accuracy for both power and energy measurements, stating that it is only relevant to characterize energy when there are actual power measurements obtained from measurement hardware (i.e., power measurement caliber is not unavailable, unknown, estimated, or presumed). It notes that energy measurements may suffer from interruptions, and provides a means of correction via RFC 3418 (MIB for the SNMP). It also notes that the ANSI and IEC accuracy classes referenced in RFC 7326 are consciously used in lieu of the precision specified by RFC 3433 (Entity Sensor MIB).[27]

---

[24] https://cem-update.cisco.com/download/files/5.2.0/docs/CEM_Online_Help/content/guide/general-concepts/Power_Measurement_Methods.htm

[25] https://datatracker.ietf.org/group/concluded/

[26] https://datatracker.ietf.org/wg/eman/charter/

[27] According to RFC 3433, implementers must choose a value for the EntitySensorPrecision object (which identifies the number of decimal places of precision associated with the sensor value) so that the precision and accuracy of the associated EntitySensorValue object is correctly indicated. It gives the following example: a physical entity representing a temperature sensor that can measure 0 to 100 °C in 0.1 °C increments, ± 0.05 °C, would have

Although the EMAN RFCs were all authored or co-authored by Cisco staff, no reference to EMAN was found in current product literature from Cisco or manufacturers of PoE lighting systems.

4.4 IETF CoRE Working Group

The IETF Constrained RESTful Environments (CoRE) working group published the Constrained Application Protocol (CoAP) in standards track RFC 7252 in June 2014, and updated the document in August 2016 with RFC 7959 (Block-Wise Transfer in CoAP). Constrained networks and nodes within are characterized by severe limits on throughput (i.e., communication), power, and complexity.[28] CoAP is a web transfer protocol designed for use with constrained nodes and networks in machine-to-machine (M2M) and IoT applications, such as building automation and energy management. CoAP has figured prominently in Cisco's Digital Ceiling—recently rebranded "Digital Building"—publications, and is supported by some of its flagship PoE switches (Cisco 2016a, b, Halper 2017, Cisco 2017). Cree provides the CoAP-based "SmartCast" API to enable integration with building automation and management systems (Cree 2016). Molex also uses CoAP for such network communication (Molex 2016).

5 Characterizing PoE System Energy Reporting Accuracy

Many standard test methods are available for measurement of electrical power and energy, and for characterizing the accuracy of such measurements. However, most of them have only limited applicability to DC circuits, and none have been developed specifically for PoE. None of the system characteristics in the following list is unique to PoE, but taken together, they present unique test and measurement challenges:

- low voltage DC input,
- multiconductor cabling,
- energy losses associated with voltage drop in cabling,
- common and differential modes,
- AC and DC signaling,
- low power modes, and
- dynamic network operation.

Recommended test configurations and procedures for verifying compliance with Clause 33 were provided in informative Annex 33C of 802.3af, however these did not include electrical instrumentation requirements and other content typically specified in standard test methods to ensure repeatability. The annex was removed in 802.3at, but test circuits and related specifications were retained in the body of the document. IEEE 802.3-2015 does not reference external test methods for measuring power or energy, nor for characterizing the accuracy of such.

EntitySensorPrecision = 1, and an EntitySensorValue ranging from 0 to 1000. Notably, this example does not address the ± 0.05 °C accuracy, and appears to (incorrectly) presume that accuracy is always half of resolution.

[28] From https://datatracker.ietf.org/wg/core/charter/, accessed January 6, 2017.

The following sections discuss several test methods relevant to the measurement of energy and power in PoE lighting systems, and characterizing the accuracy of such measurements. A discussion of test methods for measurement of cable resistance—which affects energy use but is not addressed in test methods intended for characterizing devices—is also provided.

5.1 Measuring Electrical Energy

In North America, ANSI C12-series standards are the benchmark (and, in many instances, the regulatory requirement) for verifying the accuracy of energy measurements in AC systems. At present, these standards do not address DC systems, and there is no C12-series equivalent for such systems. Potential applications for DC systems include PoE, solar photovoltaic (PV), and electric vehicle charging.

ANSI C12.1-2014 provides performance criteria for analog and digital AC devices used in revenue metering applications (ANSI 2016a). In addition to requirements for nominal 0.5 and 1.0 percent accuracy classes, test methods are also provided. Some discussion of power and energy measurements in DC circuits is provided in its Appendix A, but this material is explicitly informative rather than normative in nature. The document also addresses traceability, and some discussion of DC calibration of laboratory secondary standards (used to check shop instruments) is provided in the normative Appendix B. Recommended test plans are provided for acceptance and in-service testing to ensure accuracy is maintained, addressing field unit sampling and test intervals. ANSI C12.20-2010 provides different test tolerances and different test methods for higher performance accuracy classes (nominal 0.2 and 0.5 percent), but still does not address DC systems (ANSI 2010). Although solar arrays generate DC output power, meter accuracy in these systems is, at present, typically specified in terms of measurements taken at the AC output of a DC-AC inverter, thereby leveraging ANSI C12.1 test methods and performance classes (CPUC 2016, CEC 2013).

The ANSI Electric Vehicles Standards Panel (EVSP) published a report in November 2014 providing an overview of recent activities involving a number of organizations related to submetering for electric vehicle charging (ANSI 2014).[29] IEEE 2030.1.1-2015 subsequently established technical specifications for "DC quick chargers" that provide 50 to 500 V DC in electric vehicle charging applications (IEEE 2015b). Normative section A.7.4 of this standard specifies measurement accuracy or "instrumental precision" as within ± (1.5% of "actual value" + 1.0 A) for current, and within ±5 V for voltage; it also specifies that current and voltage data are transmitted within 0.5 seconds.

The National Electrical Manufacturers Association (NEMA) Electric Vehicle Supply Equipment/System (EVSE) Section is also addressing DC quick charging applications, and is actively working on a guide for EVSE embedded metering and communication.[30] Similarly, the National Institute of Standards and Technology (NIST) U.S. National Work Group (USNWG) on Electric Vehicle Fueling and Submetering (EVF&S) is currently developing proposed requirements for submetering devices, including those used in electric vehicle charging.[31] Development of the

[29] See https://ansi.org/standards_activities/standards_boards_panels/evsp/overview.aspx for details.
[30] See http://www.nema.org/Products/Pages/Electric-Vehicle-Supply-Equipment-System.aspx and http://www.evseready.org/ for details.
[31] See https://www.nist.gov/pml/weights-and-measures/legal-metrology-devices/electric-vehicle-fueling-and-submetering for details.

NEMA guide is being coordinated with NIST through the Smart Grid Interoperability Panel (SGIP) Priority Action Plan 22 (PAP-22) Working Group.[32]

It has been reported that revenue-grade DC energy meters are available but are more expensive than similar revenue-grade AC energy meters (Strategen/Arup 2014). However, accurate measurement over the range of DC-powered devices has been identified as a capability gap for revenue-grade DC energy meters (BPA 2015). The EMerge Alliance recently announced the formation of a new committee to establish requirements for revenue-grade DC metering in low and medium voltage applications (Emerge Alliance 2016). NEMA has initiated a project to develop an ANSI standard—designated "ESM1"—that would establish metrological requirements for AC and DC electrical submeters (ANSI 2016b). Similarly, IEC Technical Committee 13 is currently developing IEC 62053-41 ED1, which will provide requirements for DC energy metering equipment, and is currently targeted for publication in 2017 (IEC 2015).[33]

5.2 Measuring Electrical Power

Power measurements may be integrated over time to yield energy data. Although there do not appear to be any currently available test methods suitable for calculating energy from power measurements in PoE systems or similar DC circuits, several published test methods address power measurements in these applications, and are discussed in the following sections.

5.2.1 Lighting Products

The IES) publishes a variety of test methods applicable to luminaires and other lighting products; although none specifically address PoE systems or measurement of electrical energy, several address power measurements in DC circuits.

Section 8 of IES LM-79-08 addresses electrical measurements for LED products (e.g., luminaires and integrated lamps) that require only AC mains voltage or a DC voltage power supply to operate (IES 2008). It states that a DC voltmeter and a DC ammeter are used for DC-input products, and specifies connection methods. It specifies a maximum relative expanded calibration uncertainty of 0.1% for instruments used to measure DC voltage and current, as well as the corresponding percent confidence interval and coverage factor. ANSI/NCSL and ISO guidance is referenced regarding the expression of uncertainty in measurement (ISO 1993, NCSL 1997).

Section 5 of IES LM-82-12 addresses electrical measurements for LED light engines and LED lamps in AC and DC circuits when operated at varying temperatures (IES 2012b). It states that a DC digital voltmeter or multimeter shall be used for DC voltage measurements, and a DC digital ammeter or digital voltmeter with a current shunt shall be used for DC current measurements. It also prescribes connection methods and specifies a maximum uncertainty of 0.2% for voltage and current measurements in DC circuits.

IES LM-28-12 provides guidance on the selection, care, and use of electrical instruments in the photometric laboratory (IES 2012a).[34] Although it serves as a helpful compendium of general

[32] See http://www.sgip.org/committees-member-groups/ for details.
[33] See http://www.iec.ch/dyn/www/f?p=103:7:0::::FSP_ORG_ID:1258
[34] This document explicitly uses the term "instrument" in lieu of the term "meter."

recommended practices applicable to DC lighting systems, it does not contain any test setup specifications or test methods.

5.2.2 LED Drivers

ANSI C82.16-2015 provides methods of measuring a wide range of LED driver performance characteristics (ANSI 2015). Its scope includes, but is not limited to, LED drivers that receive AC or DC input power and produce constant-current or constant-voltage DC output power. Although communication (e.g., over a network) and low power modes (e.g., corresponding to network connectivity) are not specifically addressed, it notes that LED driver output can be fixed, variable (i.e., dimmable), pulse-width modulated (PWM), or programmable (i.e., limited to one or more maximum or minimum levels). Section 1.5 contains guidance similar in nature to that found in IES LM-28-12. Section 1.7 provides performance requirements for instrumentation used to measure voltage, current, and power waveforms with AC and DC components; 0.5% basic accuracy is specified for DC and additional criteria are given for impedance, bandwidth, and digital oscilloscope memory capability.

5.2.3 Office Equipment

The ENERGY STAR test method for Large Network Equipment (LNE) is applicable to AC and DC-powered PoE switches, and references the 2012 edition of IEEE 802.3 (EPA 2016b). It specifies test conditions and instrumentation requirements, and references ATIS-0600015.03.2013 for all "test conduct" unless noted otherwise (ATIS 2013).[35] This ATIS document does not address the measurement of DC output power, instead focusing on the measurement of communication throughput.[36] However, the ENERGY STAR test method specifies minimum resolution for "power meters" (as a function of reading), and requires power meters to have an overall accuracy of 1% or better.

The ENERGY STAR test method for Small Network Equipment (SNE) is not applicable to network equipment that receives DC power (e.g., PoE) or provides power through PoE (EPA 2013b). If a test unit uses an external power supply (EPS) to convert line voltage AC to low voltage DC, the EPS is considered part of the SNE and power is measured at the AC input to the EPS; measurement of SNE output power is not addressed. However, the test method specifies minimum resolution for "power meters" (as a function of reading). It also requires power measurements ≥ 0.5 W to be made with an uncertainty of ≤ 2%, and specifies an uncertainty of ≤ 0.01 W for measurements < 0.5 W, at the 95% confidence level in both cases. Test setup requirements include reference to the second edition of IEC 62301 (IEC 2011).

The ENERGY STAR test method for telephony is applicable to certain types of direct PoE loads such as IP phones, and references the 2012 edition of IEEE 802.3 (EPA 2013a). Among other requirements, it states that a "PoE power meter" must act as a PSE or allow another PSE to source power to the PD, and must measure directly from a one-meter length Category 5e or 6 cable connecting it to the PD. It also specifies minimum resolution as a function of reading, and requires

[35] The 2016 edition is now available (http://webstore.ansi.org/RecordDetail.aspx?sku=ATIS-0600015.03.2016). Notably, ETSI ES 203 136 V1.1.1 (2013-05) also references ATIS-0600015.2009 for "measurement conditions."
[36] From email correspondence with ATIS staff dated September 19, 2016.

PoE power meters to have an accuracy of ± (2% + 0.1 W). Other test setup requirements reference the second edition of IEC 62301.

5.2.4 External Power Supplies

The ENERGY STAR eligibility criteria for SNE (EPA 2014a) and telephony (EPA 2014b) products reference the DOE test procedure in appendix Z to subpart B of 10 CFR part 430 for EPS efficiency testing (DOE 2015).[37] PoE switches meeting the definition of EPS given at 10 CFR 430.2 must be tested according to this DOE test procedure to ensure compliance with the energy conservation standards given at 10 CFR 430.32(w) (DOE 2014). Test setup requirements include reference to the second edition of IEC 62301 for a number of specific requirements (e.g., regarding room environment, AC voltage source, measurement uncertainty, and handling unstable power readings) as well as reference to IEEE 1515-2000, which provides general recommended test practices for electronic power distribution equipment in its Annex B (IEEE 2000).

5.2.5 Low Power Modes

IEC 62301 specifies test methods for measuring electrical power draw in low power modes including network modes, standby modes, and off modes. The measurement of energy consumption is explicitly excluded from the scope of IEC 62301, as explained in the informative Annex A. However, guidance is provided for calculating average power draw based on measurements of energy consumption over a corresponding time interval. Average power draw can be determined by the "sampling" method regardless of whether the load is stable or unstable; the alternative "average reading" and "direct meter reading" methods can only be used if the load is stable. Although DC powered products are explicitly excluded from the scope of IEC 62301, its instrumentation specifications require that power measurement accuracy be met at DC, and from 10 to 2,000 Hz AC. The document also provides guidance on instrument selection similar in nature to that offered in IES LM-28-12.

5.3 Measuring Cable Resistance

PoE lighting systems can offer improved efficiency relative to traditional line voltage AC systems because AC-DC power conversion losses are reduced if this work is consolidated among one or more PoE switches, rather than being distributed among a greater number of smaller LED drivers (Thomas, Azevedo, and Morgan 2012). However, if the system is poorly designed, this effect can be offset to some extent by increased losses associated with increased voltage drop in the low-voltage Ethernet cabling. Excessive voltage drop can also compromise device performance, and the energy dissipated in cables experiencing significant voltage drop can also pose safety concerns, for example due to cumulative heating effects in cable bundles (UL 2015a, Randy Ivans 2015, Shulman 2015).

Cabling losses are directly dependent on conductor resistance; reducing conductor resistance generally entails using conductors of numerically smaller American Wire Gauge (AWG) designation (i.e., larger diameter) and/or reducing the length of cabling from PSE to PD, but can also be accomplished by reducing the number of conductor twists per unit cable length (thereby reducing conductor length). Compliance with applicable standards (e.g., from the TIA 568-series) that specify

[37] For details, browse Title 10 of the electronic Code of Federal Regulations (CFR) at http://www.ecfr.gov.

maximum cable resistance is typically indicated on cable product cut-sheets; in some cases, nominal and/or maximum DC resistance (DCR) in ohms (Ω) per 100 meters is indicated as well.

Clause 33 of IEEE 802.3-2015 references performance criteria in ANSI/TIA/EIA-568-A for Category 5 cabling and ANSI/TIA-568-C.2 for Category 5e or better cabling (TIA 1995, 2009a).[38] TIA-568-C.2 provides test methods in addition to performance criteria. A related document, TIA-1152-A, provides accuracy requirements for field test instruments, as well as methods for comparing field measurements against TIA-568-C.2 laboratory measurements (TIA 2016a). Additional field test guidance is provided in TIA-TSB-184 (TIA 2009b).

TIA-568-C.2 also includes a reference to ANSI/NEMA WC 66/ICEA S-116-732-2013 for Category 6 and 6A cables (NEMA-ICEA 2013). This joint publication of NEMA and the Insulated Cable Engineers Association (ICEA) provides performance criteria. It in turn references American Society for Testing and Materials (ASTM) test method ASTM D 4566-05e1, which addresses "conductor resistance" among other metrics (ASTM 2005). ANSI/ICEA S-90-661-2012 contains similar requirements for Category 3, 5, and 5e cables (ICEA 2012).

6 Recommendations

This study is the first of a multi-part effort to explore the energy reporting capability of commercially available PoE connected lighting systems. This exploration was aimed at answering the following key questions, which might then facilitate the identification of industry needs, and development of recommendations for meeting those needs.

1 Question

- How prevalent is energy use reporting in commercially-marketed PoE devices and systems?

Answer

- Most commercially-marketed systems provide some level of energy reporting.

Recommendations

- Some minimum level of energy reporting capability should be established for PoE devices and systems.
- Some minimum level of detail describing energy reporting capabilities should be developed and adopted by manufacturers and technology providers. Industry (e.g., NEMA) might develop such detail as a recommended practice; DOE could facilitate discussion and solicit and focus user needs and wants.

2 Question

- Where in commercially-marketed PoE systems is energy use being reported—e.g., by PDs, PSEs, or both?

[38] TIA is in the process of changing the naming convention for its 568-series documents from *[number]-[revision].[part]* to *[number].[part]-[revision]* to align with its other publications; for example, whereas TIA-568-B.2 was replaced by TIA-568-C.2 (Congdon 2008), TIA-568-C.2 will be replaced by TIA-568.2-D (TIA 2016b).

Answer

- In most cases the reporting location is not well articulated in product literature, or it is easy to misunderstand exactly what is being reported (e.g., the input or output of a PoE switch, or direct PoE load).

Recommendations

- Some minimum level of detail describing where energy is reported should be developed and adopted by manufacturers and technology providers. Industry (e.g., NEMA) might develop such detail as a recommended practice; DOE could facilitate discussion and solicit and focus user needs and wants.

3 Question

- Is energy loss in PoE cables and connections being reported?

Answer

- Energy loss in PoE cables and connections is not typically being reported explicitly; consequently, it is difficult to gauge the relative significance of these losses. In some cases—e.g., where the PoE switch is directly measuring energy at each port, thereby capturing the energy consumption of cabling, the direct PoE load, and any indirect PoE loads—cable and connection losses may be included in a reported value. Notably, P802.3bt may address measurement of cable resistance (Microsemi 2016).

Recommendations

- An ANSI C137 working group is currently developing a recommended practice for limiting PoE cable losses. Manufacturers, technology developers, energy efficiency organizations, and other stakeholders who have an opinion on the degree to which such losses should be limited should contribute to and review this recommended practice. System integrators, installers, and other stakeholders who are experienced with or have an opinion on recommended practices should contribute to and review this recommended practice.
- DOE is considering whether or not to design and execute a study to characterize the impact of cable and connector losses on example PoE system architectures, and verify that the recommended practices in ANSI C137 achieve their stated goal (i.e., of limiting such losses below a described level). For such a study, DOE would consult with relevant industry experts on the development of PoE system architectures to be characterized, so that they capture real-world installations and practices that span best-case (recommended), to typical, to worst-case. Industry stakeholders should provide feedback to DOE on the value of such a study.

4 Question

What energy reporting performance (e.g., accuracy and precision) are manufacturers claiming for their commercially-marketed PoE lighting devices and systems? More specifically:

- How is performance being reported? E.g., as a % accuracy of reading, as a % accuracy of full-scale, as an accuracy and precision?
- For what conditions are performance claims made? E.g., for worst-case conditions, for best-case conditions, or for some definition of nominal conditions?
- Are different levels of performance claims made for varying system or environmental conditions? E.g., for varying loading or operating power levels, for varying temperatures, or for varying average cable lengths?

Answer

- At this time, DOE is not aware of any commercially-marketed PoE lighting devices or systems with formal energy reporting performance claims. In some cases, upon inquiry, manufacturers were willing to make simple, informal quantitative (e.g., accuracy < 5%) performance claims. No manufacturers volunteered specific test methods that were used to characterize their device or system performance.

Recommendations

- Some minimum level of detail describing how energy is reported should be developed and adopted by manufacturers and technology providers. This detail should include energy reporting performance, including accuracy and precision, as characterized per industry standards and specifications.
- Standards or specifications describing test setups, test methods, and performance classes suitable for characterizing the energy reporting performance claims of PoE and other connected lighting devices and systems should be identified, or developed, as necessary, so that competing claims (e.g., for different devices and systems, or from different manufacturers) can be easily and fairly compared.

5 Question

- Which existing test setups, test methods, and performance classes for characterizing energy reporting performance are or appear suitable for PoE lighting devices and systems? Do any modifications or adaptations appear necessary to make them more suitable?

Answer

- While a number of existing test setups and test methods for characterizing energy reporting performance appear suitable for PoE lighting devices and systems, none of them is completely sufficient in practice.

Recommendations

- An ANSI C137 working group is currently interviewing relevant stakeholders to support the development of consensus energy reporting performance needs for many energy data use cases. Lighting system owners and operators, energy efficiency organizations, and other stakeholders who use or might use energy data, and have an opinion on what levels of energy reporting performance is required to support their use case, should contribute to the development of consensus use case needs being developed by the ANSI C137 working group.
- The ANSI C12 committee and NIST U.S. National Work Group (USNWG), Watthour-Type Electric Meters Subgroup are current exploring whether or not they should develop new test setups, methods, and performance classifications—or modify existing ones—to support the characterization of PoE and other lighting devices and systems. Manufacturers, technology developers, and other stakeholders who are experienced in the characterization of energy reporting performance should contribute to and review any test setups and methods included in standards and specifications developed by these organizations. Lighting system owners and operators, energy efficiency organizations, and other stakeholders who use energy data, and have an opinion on what levels of energy reporting performance is required to support their use case should review any performance classes included in standards and specifications developed by these organizations. All lighting industry stakeholders should encourage standard and specification development organizations to coordinate existing and new activities,

eliminate competing activities, minimize overlap, and otherwise strive to efficiently develop and maintain test setups, test methods, and performance classes for characterizing energy reporting performance that are appropriate for PoE and other lighting devices and systems—and possibly other similar end-use equipment (e.g., consumer electronic devices, office equipment). DOE is considering whether or not to engage in this work. Industry stakeholders should provide feedback to DOE on the value of such DOE engagement.

- DOE is already collaborating with interested lighting industry stakeholders to develop test setups and methods suitable for characterizing the energy reporting performance of PoE and other connected lighting devices and systems. DOE is currently planning to document these setups and methods at appropriate intervals, as they are developed, and make them available to standards and specification development organizations, as well as manufacturers, technology developers, and other interested stakeholders. Industry stakeholders should provide feedback to DOE on these activities.

6 Question

- What physical (e.g., cabling, network architecture), logical (e.g., information/data models), and temporal (e.g., network volume, traffic) differences among PoE lighting systems might need to be addressed when characterizing energy reporting performance?

Answer

- Many different types (e.g., Ethernet) and lengths of cabling might be used in PoE lighting systems.
- Many PoE architectures are possible with currently-marketed PoE lighting devices. Some systems require a PoE controller. One or more indirect PoE loads may sink power from some direct PoE loads. Indirect PoE loads may be connected to direct PoE loads using a variety of technologies (i.e., power and communication protocols, cabling) in series, or in parallel, depending on the technology utilized.
- Most commercially-marketed PoE lighting systems use information/data models unique to their manufacturers.
- Many approaches can be used to architect Ethernet network systems, balancing communication performance with cost and other considerations. Different approaches can result in widely varying network volume and traffic for a given network application.

Recommendations

- Ensure that it is well-understood whether or not cabling energy use is included in any reported energy value.
- Ensure that it is well-understood where (i.e., from what device, input or output) energy use is being reported.
- Evaluate energy reporting performance for the full range of possible PoE architectures (e.g., heavily loaded and lightly loaded PoE switches, with and without indirect PoE loads).
- Limit test environments to devices from a single manufacturer, to ensure all devices are using the same energy information/data model.
- Evaluate energy reporting performance for the full range of possible network volume and traffic for a given lighting application.

7 Question

- What have prior studies found regarding the energy reporting accuracy of commercially marketed PoE lighting devices and systems?

Answer

- At this time, DOE is not aware of any rigorous, independent, publically-available studies characterizing the reporting accuracy and precision of commercially-marketed PoE lighting devices and systems.

Recommendations

- DOE is considering whether or not to design, execute, and publish one or more studies characterizing the reporting accuracy and precision of multiple commercially-marketed PoE lighting devices and systems comprising one or more possible PoE system architectures. DOE is considering whether or not to utilize their internally-developed test setups and test methods for characterizing energy reporting performance claims, and leverage lessons learned during the execution of these studies to modify or improve their test setups and methods, as appropriate. Industry stakeholders should provide feedback to DOE on these considerations.

Other Recommendations

One possible format for describing PoE energy reporting accuracy is shown in Table 6.1.

Table 6.1 Template for characterizing energy reporting accuracy

Characteristic [Notes]	**Device 1** [Examples]
Reporting location	[CMS, PoE controller, PoE switch input or output (port), direct PoE load input (port) or output, indirect PoE load input or output]
Reported Attribute (Range) [Should be described as instantaneous, or averaged over some time window, as appropriate] [Instantaneous voltage and current attributes should specify whether the reported values are for the same time window, or not]	[Energy (1-100 Wh), power (0.1-100 W), electric potential (1-120 V)]
Logging Interval (Minutes)	[Every 15 minutes]
Reporting Interval (Hours)	[Every 24 hours]
Accuracy [Accuracy specifications are typically relative to either the reading or full scale] [% of full scale accuracy can be determined from rated % of reading accuracy] [Only the lower limit for % of reading accuracy (at top of scale) can be determined from rated % of full scale accuracy]	[1% of reading] [2% of full scale]
Precision	[1% of reading] [2% of full scale]
Accuracy & Precision	[The average accuracy of 100 measurements of energy, consumed over 15 minute intervals, taken from a single device, is within 5%] [The average accuracy of 10 measurements of energy, consumed over 15 minute intervals, taken from 100 devices, is within 5%]

Appendix A — Lighting Manufacturer Literature Excerpts

General note: Italicized text indicates direct quotes.

CommScope (acquired Redwood Systems)[39]

Energy reporting	*Redwood's ongoing data streams also provide best-in-class control for your LED lighting systems. The Redwood Director, an easy-to-deploy appliance, supports a dynamic web-based interface that lets you monitor and manage your lighting from anywhere and nearly any device. It's a facility-wide topology that provides granular control of every light and best-in-class data for improved building intelligence.*
PoE controller	*Redwood Director [...] provides unified management, control and reporting on a cluster of more than 8 Redwood Engines. Hosts the Redwood Open Application Framework, which provides two-way communication and systems integration between the data collected by the Redwood Platform and other external applications or systems.*
PoE switch	*Redwood Engine [...] Manages policies, communicates to Redwood Gateways, distributes low- voltage DC power to all fixtures, and collects sensor data.*
	Per port DC output: 18–53VDC / 100–700mA Nominal 34W per port
Cable to direct PoE load	*RG-2G-LED-1CHANNEL Redwood® LED Gateway, Generation 2, one channel, unprogrammed [...]* *Engine Connector Interface RJ45 [...] ANSI/TIA Category 5e | 6 | 6A*
Direct PoE load	*Redwood LED Gateway connects to Sensor, Fixture and Engine [...] Profiles fixtures, aggregates sensor data, sends sensor data to the engine, and manages power connections between engines and fixtures.*
	Redwood Adapter integrated Sensor and Gateway [...] Connects the Engine to each fixture and communicates data about light levels, motion detection, and environmental conditions.
	Power Consumption, standby, maximum 500 mW
Cable to indirect PoE load	*RS-2G Redwood® Sensor Pod, Generation 2 [...]* *Gateway Connector Interface RJ25 [...] ANSI/TIA Category 5e | 6 | 6A*
	SEN-3MP-W Redwood® Sensor Pod, Generation 3 [...] *Gateway Connector Interface RJ45 [...] ANSI/TIA Category 5e | 6 | 6A*
Indirect PoE load	*Redwood Sensor connects to Gateway and provides data for lighting control and building intelligence [...] Collects data on light levels, occupancy and temperature.*
	SEN-3MP-W Redwood® Sensor Pod, Generation 3 [...] Power Consumption, maximum 10 mW

[39] CommScope no longer markets Redwood products, but datasheets for obsoleted products are posted online at http://www.commscope.com/SiteSearch/?q=redwood (last accessed January 1, 2017).

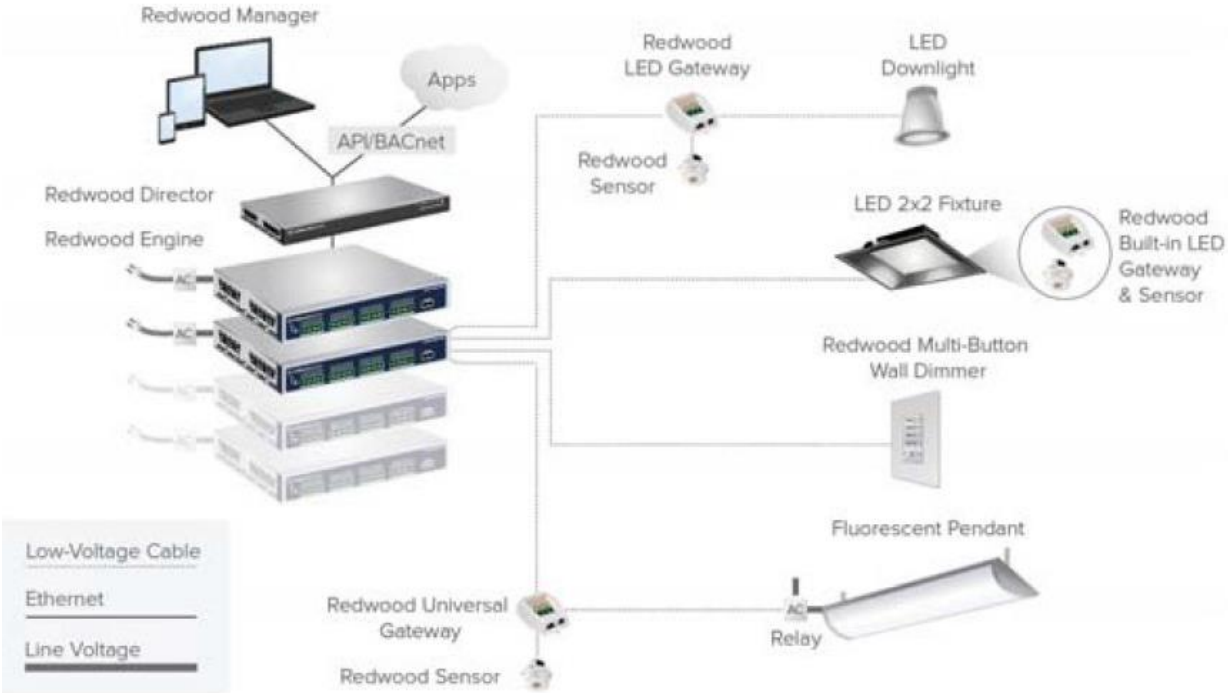
Redwood Manager
Apps
API/BACnet
Redwood Director
Redwood Engine
Redwood
LED Gateway
LED
Downlight
Redwood
Sensor
LED 2x2 Fixture
Redwood
Built-in LED
Gateway
& Sensor
Redwood Multi-Button
Wall Dimmer
Fluorescent Pendant
Low-Voltage Cable
Ethernet
Line Voltage
Redwood Universal
Gateway
Relay
Redwood Sensor

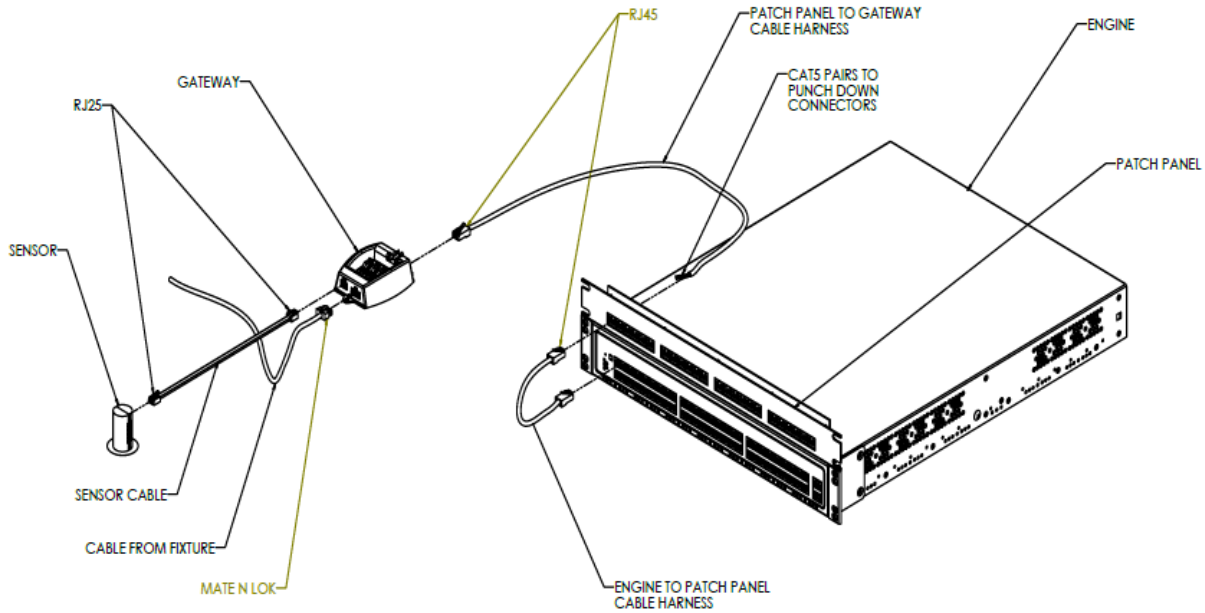
RJ45
PATCH PANEL TO GATEWAY
CABLE HARNESS
ENGINE
GATEWAY
RJ25
CAT5 PAIRS TO
PUNCH DOWN
CONNECTORS
PATCH PANEL
SENSOR
SENSOR CABLE
CABLE FROM FIXTURE
MATE N LOK
ENGINE TO PATCH PANEL
CABLE HARNESS

Cree[40]

Energy reporting	*Cree SmartCast® PoE-enabled luminaires do more than just light your spaces. [...] With the SmartCast® API, third-party apps can access data and set controls on SmartCast® luminaires in the following ways [...] Detect and record power consumption, down to the individual luminaire. [...] Advanced power usage, energy savings, and lighting performance visualizations and reporting.*
	Cree SmartCast® Manager PC Application for Setup, Dashboard and Energy Analytics [...] Software is only operational when connected to SmartCast® PoE lighting VLAN.
PoE controller	*The optional SmartCast® Link provides the connection between the lighting network and third parties through the enterprise IP network while securely separating and protecting critical systems for added protection. [...]The SmartCast® API provides the ability for the lighting network to communicate with and be controlled by other applications via the SmartCast® Link. Its standards-based CoAP protocol is future-ready and developer-friendly*
PoE switch	*Recommended network switches are Cisco Catalyst 4506-E, WS-C3850-24U-S and WS-C3850-48U-S.*
	uPoE recommended to enable full fixture output. Compatible with PoE (15.4W max) and PoE+ (30W max) at reduced output
Cable to direct PoE load	*Category 5e or 6a cables, shielded or unshielded. Finalize selection with infrastructure provider based on run length or other installation details*
	A CAT5e or CAT6 Ethernet cable connects each Cree device to uPoE or PoE+ switches that provide both low-voltage power to the lights and allow two-way data communication across the lighting network and optionally, building management systems, the Internet and the cloud.
Direct PoE load: Luminaire with sensors	*SmartCast® PoE supports PoE, PoE+ and UPoE* *• CR Series troffers 4000 lumens max on UPoE or 3000 lumens on PoE+* *• KR Series downlights 2000 lumens max on UPoE or PoE+ (30W)*
	*Luminaire Efficacy : 100 LPW **
	Standby Power: <1.0W
	fixtures share data with each other from their integrated occupancy and daylight sensors while utilizing their embedded intelligence and sophisticated algorithms to provide precisely the right amount of light at the right time based on changing conditions within the building
Direct PoE load: Sensor	*POWER OVER ETHERNET INFRASTRUCTURE (BY OTHERS) [...] Delivers power and data to the dimmer with one cable from PoE switch port to dimmer*
	Input Power: <1 Watt

* Luminaire input power is not stated on product cutsheets, but can be calculated as the quotient of stated lumen output and efficacy. Values calculated accordingly ranged from 1.6 to 40 W.

[40] http://www2.cree.com/smartcast-landing-page, http://lighting.cree.com/products/controls/cree-smartcast-technology

INTELLIGENT LIGHT MADE POSSIBLE WITH CREE SMARTCAST® PoE.

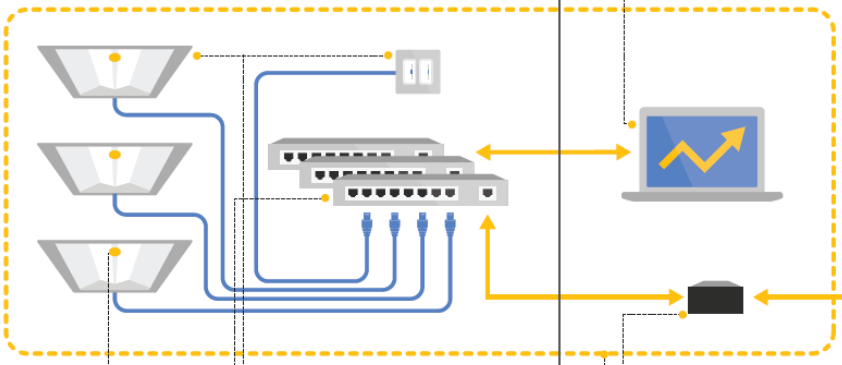

SMARTCAST® MANAGER PC APP

The SmartCast® Manager initiates Cree's unique OneButton™ Setup and allows intuitively simple changes to the system and settings. It also enables real-time visibility into system status and advanced energy savings strategies including task tuning and energy savings visualization.

CLOUD

SmartCast® Link connects through the enterprise LAN to enable a nearly limitless number of integrations and applications.

SENSORS

Cree SmartCast® luminaires are shipped from the factory with advanced lighting control sensors and embedded intelligence that provide the right amount of light based on changing occupancy and daylighting conditions. The lights sense when you're in the room and turn off when you're not. Lights automatically dim on sunny days and provide more light when you need it. All while providing up to 70% energy savings.

SMARTCAST® LUMINAIRES AND DIMMERS

Cree luminaires deliver better light — beautiful, consistent and pleasing illumination that enhances the appearance of your facilities, delights end users and supports productivity with exceptional color rendering and temperature tuned to specific tasks or personal preference.

PoE SWITCHES

A CAT5e or CAT6 Ethernet cable connects each Cree device to uPoE or PoE+ switches that provide both low-voltage power to the lights and allow two-way data communication across the lighting network and optionally, building management systems, the Internet and the cloud.

SMARTCAST® LINK

The optional SmartCast® Link provides the connection between the lighting network and third parties through the enterprise IP network while securely separating and protecting critical systems for added protection.

LIGHTING NETWORK

The lights and PoE switches are a part of the lighting network which, as part of the virtual local area network, delivers commands and messages across the platform. It can work independently or use SmartCast® Link for full integration into the enterprise network.

ENTERPRISE IP LOCAL AREA NETWORK

The SmartCast® PoE platform smoothly integrates with IP-based enterprise local area networks while requiring only simple configuration changes for a VLAN — no network redesign required. SmartCast® PoE works with what you have.

SMARTCAST® API

The SmartCast® API provides the ability for the lighting network to communicate with and be controlled by other applications via the SmartCast® Link. Its standards-based CoAP protocol is future-ready and developer-friendly, making integration with building automation systems and IoT applications simple.

CREE | SMARTCAST® TECHNOLOGY

Igor [41]

Energy reporting	*Granular control on a grand scale [...] Igor gives users the power of real-time lighting control and monitoring at any level. Manage any part of your lighting infrastructure through a single system.*
	Sensor data, energy data, system data, even daily backups are stored and unified at Igor's open cloud analytics platform, providing unprecedented management.
PoE controller	*The Igor Gateway software communicates bi-directionally with the nodes to control lighting levels for each space as well as receiving incoming commands from sensors and other devices to improve occupant comfort and optimize energy savings.*
PoE switch	*The Category 5 or Cat5 cable, which replaces traditional power wiring, transmits both power and data to smart fixtures such as LED lights from a PoE switch such as the Cisco Catalyst 3850-X and 3560-X Series Power over Ethernet (PoE) Switches.**
Cable to direct PoE load	*Cat5 combines both the power and data into one cable which saves the builder tremendously on wiring costs.*
	PoE Input Connection: Unshielded female RJ45 jack for use with CAT5/6 cable to PSE device
Direct PoE load: "network node"	*IEEE 802.3at-2009 PD Type 2, Class 4, Compliant Input with LLDP extensions for negotiating power above 30W using 4 pairs*
	With the flexibility of PoE and UPoE, we are now able to run up to 60 watts of energy through Ethernet, supporting larger and more complex energy needs.
	The Igor Network node acts as an intelligent lighting hub by receiving power & data from the network switch, and passing it downstream to the daisy-chained device nodes via the Igor bus.
	Bi-directional output connection used to power and communicate with Igor device nodes
	LED Driver Connections [...] External Sensor/Relay Connections [...] Wall Switch Connections
	Peak Operating Power: 60W
	Nominal Standby Power: 2.0W
Cable to indirect PoE load	*Igor Bus Input / Output Connections: Two unshielded female RJ45 jacks for use with CAT5/6 cable to Igor Network Node or other Device Nodes.*
Indirect PoE load: "device node"	*Bi-directional input/output connections used to power and communicate with other Igor nodes*
	LED Driver Connections [...] External Sensor/Relay Connections [...] Wall Switch Connections
	Peak Operating Power: 60W
	Nominal Standby Power: 1.4W

* Manufacturer indicated by email February 14, 2017, that the Cisco Catalyst Digital Building Series Switch is also compatible.

[41] http://www.igor-tech.com/

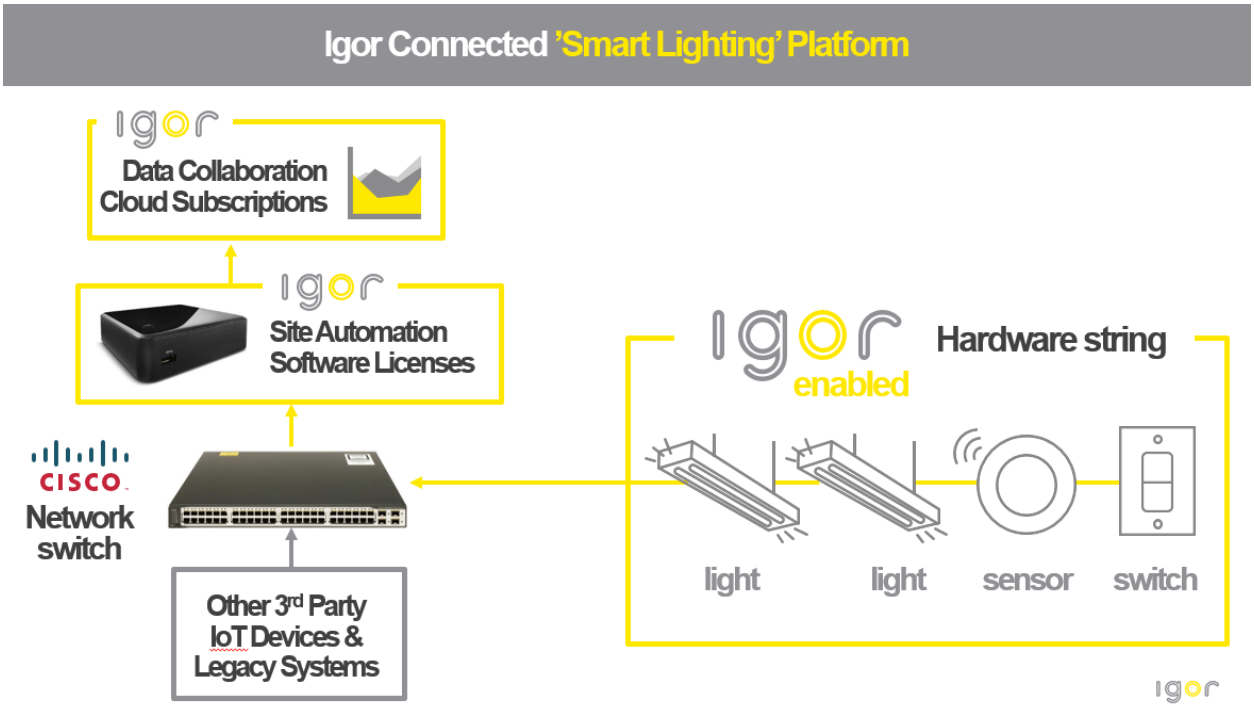
Igor Connected 'Smart Lighting' Platform
igor
Data Collaboration
Cloud Subscriptions
igor
Site Automation
Software Licenses
CISCO
Network
switch
Other 3rd Party
IoT Devices &
Legacy Systems
igor
enabled
Hardware string
light
light
sensor
switch
igor

Innovative Lighting [42]

Energy reporting	*Analytics and ultra precise usage data provide enormous energy savings potential and cloud based service means you can monitor your facility from anywhere.*
	Bring your facility's energy management into focus with fully customizable lighting. Advanced scheduling, action sets, device management, data collection and reporting are at your fingertips.
	Real Time Energy Use Reporting
	GENISYS will automatically track and chronicle energy data at an unprecedented level. Wall switches and sensors are now active participants in the work place, providing GENISYS with multiple data points from which to extract behavioral data.
	Addressability is yet another feature of the GENISYS PoE Lighting System which incrementally reduces your lighting energy usage.
PoE controller	
PoE switch	*System power for the GENISYS PoE Lighting System comes from a PoE+ (30W per port) or a UPoE (60W per port) networking switch. An open IEEE infrastructure means that you can use the PoE Switch of your choice.*
Cable to direct PoE load	*From the switch, Ethernet cables are run to the Intellidrive.*
Direct PoE load: "Intellidrive"	*IEEE Std 802.3at-2009 PD Type 2, Class 4, Compliant Input with LLDP extensions for negotiating power above 30W using 4 pairs*
	When connected to a PoE enabled switch or midspan, the Intellidrive can both receive power from, and exchange data with, this PoE source to power, control, and monitor LED light fixtures. The Intellidrive also has a data port for communicating with other control devices such as the Multi-Function Sensor and the Dimmable Wall Switch.
	As a smart lighting controller, the Intellidrive determines the type of light fixture connected to it and determines the proper current to drive the light fixture by its type.
	Input Average Power: 51W [...] Peak Operating Power: 63W *Nominal Standby Power: 3W*
Cable to indirect PoE load	*By utilizing the simple brilliance of an Ethernet cable to both power and control LED fixtures, Power over Ethernet lighting provides ultimate simplicity to an otherwise confusing Internet of Things (IoT). Every single component in GENISYS PoE Lighting Systems is powered and controlled by an Ethernet cable.**
Indirect PoE load	*PoE Downlight [...] Energy (Watts) [...] 8.8W*
	PoE A2 Series Troffer [...] Energy (Watts) [...] 41.0W
	PoE Wall Switch [...] Max Operating Power: 400mW *Typical Operating Power: 200mW*
	PoE Multi-Function Sensor [...] Max Operating Power: 170mW *Typical Operating Power: 150mW*

* The manufacturer clarified by email the Intellidrive does not source 802.3at or UPOE power.

[42] www.genisyslighting.com, www.innovativelight.com/commercial-industrial-led-lighting/poe-led-lighting

GENISYS
POE LIGHTING SYSTEMS
System Overview
PoE SWITCH
INTELLIDRIVE
WALL SWITCH
SENSOR
OPTIMIZED LED LIGHT FIXTURE

LumenCache[43]

Energy reporting	*Gateway API for lots of smart apps: control, energy management, access control, security, asset tracking, home healthcare*
PoE controller	*An AC/DC Power Management module installed at the hub provides over-current protection to up to six PDMs and monitors the energy consumption to the PDMs and batteries*
	How it works [...] *8. Attach optional gateway to control from a home automation system.*
PoE switch	*The backbone of the Lumen Cache system is the Power Distribution Module (PDM), which creates up to 16 control channels, each of which can support groups of lights, sensors, switches and keypads depending on which "Puck" is snapped into the circuit.*
	Platform base for termination of up to 16 field wires via RJ45 Ports. LED Driver and Switching modules plug into 16 Port Sockets.
	Max Power/port 16W
Cable to direct PoE load	*Lights, sensors, shades, mobile device charging, etc all powered over safe, inexpensive Cat5 data wires*
Direct PoE load	*Four of the pins on the RJ45 connector are used for Accessory power (Regulated 12Vdc) and a Data/Switch pair for communicating switch and sensor input signals back to the PDM Socket.*
	The LibRE Constant Current LED Driver is at the other end of the wire inserted into the PDM Port Socket–you do NOT include an AC LED Driver. There are several LibRE drivers to choose from: 150mA, 250mA, and 300mA all support LED Vf up to 48V.
	Typically, one driver is required for each fixture. Some fixtures below 7W can be run in Series up to 3 per driver (refer to fixture specs).
	F007 Series Recessed Flat Round Downlights [...] Power (Watts) [...] 4
	F005 Series 2'x2' Lay-In Tile Ceiling Flat [...] Power (Watts) [...] 28

[43] http://lumencache.lighting/

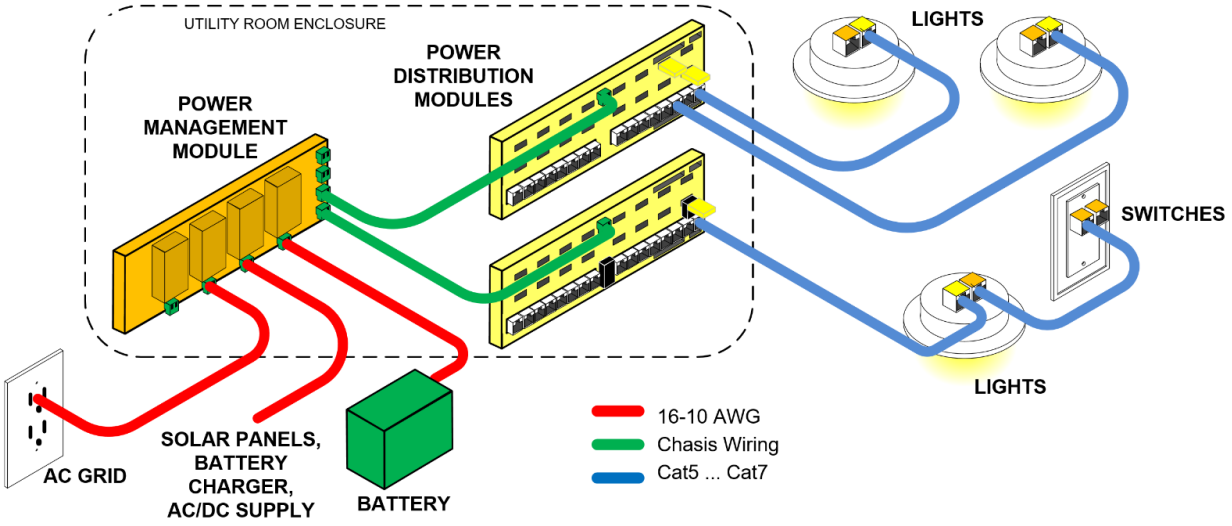
UTILITY ROOM ENCLOSURE
POWER MANAGEMENT MODULE
POWER DISTRIBUTION MODULES
LIGHTS
SWITCHES
LIGHTS
AC GRID
SOLAR PANELS, BATTERY CHARGER, AC/DC SUPPLY
BATTERY
16-10 AWG
Chasis Wiring
Cat5 ... Cat7

Lunera[44]

Energy reporting	
PoE controller	
PoE switch	*The first part of the solution is the PowerHive Power Distribution Control Unit (PDCU) which centralizes AC-to-DC power conversion, emergency battery, and dimming controls for up to 10 fixtures. All fixtures connected to a PDCU can be controlled as group using standard 0-10V dimming protocols. For individual fixture control and to take advantage of wired or wireless occupancy and daylight sensors, the PDCU comes Lutron® EcoSystem Enabled®.*
	When loss-of-power is detected, the PowerHive switches to battery mode and signals the fixture to dim to 10%
	0-10V dimming signals are bussed to the fixtures through the same CAT5 cable used for power distribution
	Output Power 48V DC via (12) RJ45 Class II ports (400W Max)
Cable to direct PoE load	*By using low-voltage DC, the troffers can be simply tethered via Cat 5 cable to the PDCU, which distributes 48V low voltage DC power and emergency battery power to the troffer. In the same Cat 5 cable, dimming and switching controls are transmitted, eliminating the need for additional wiring. The standard RJ-45 terminator on the Cat 5 cable makes relocating a PowerHive troffer as easy as unplugging a cord.*
Direct PoE load	*The second part of the solution is the PowerHive low voltage DC LED troffer. The PowerHive troffers [...] operate on 48V DC and are connected to the PDCU via Cat 5 cable. Up to 10 troffers per PDCU receive operating and emergency backup power, 0-10V dimming and occupancy/daylight sensing control through a simple Cat 5 cable.*
	The PowerHive troffers are available with standard 0-10V dimming that is ready to connect to various third-party controls or Lutron EcoSystem® Enabled.

[44] https://www.lunera.com

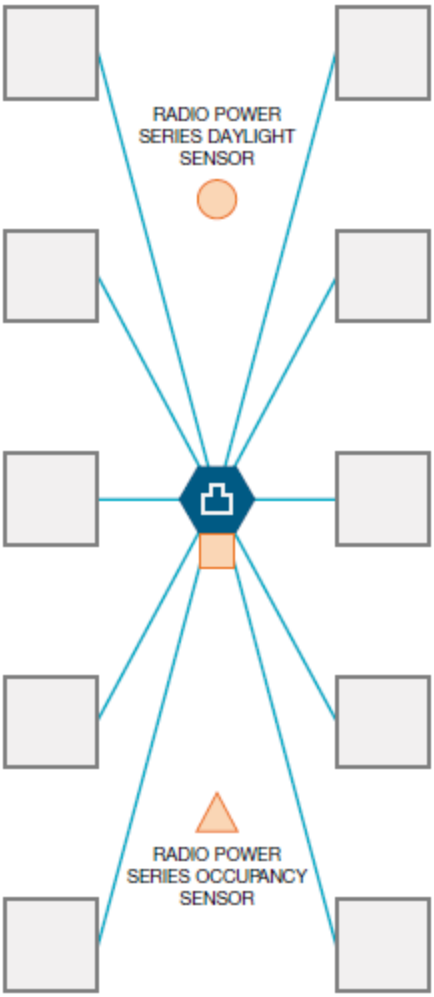
RADIO POWER
SERIES DAYLIGHT
SENSOR
RADIO POWER
SERIES OCCUPANCY
SENSOR

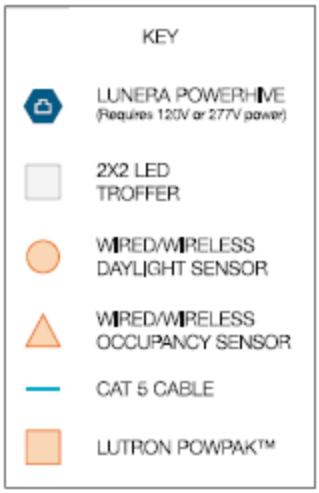
KEY
LUNERA POWERHIVE
(Requires 120V or 277V power)
2X2 LED
TROFFER
WIRED/WIRELESS
DAYLIGHT SENSOR
WIRED/WIRELESS
OCCUPANCY SENSOR
CAT 5 CABLE
LUTRON POWPAK™

MHT Lighting[45]

Energy reporting	*features include a master control function which enables the user to manage all system elements with a single button, or the individual granularity to control every component one by one. The inspeXtor can chart kW consumption, energy savings, and the ambient temperature simultaneously.*
PoE controller	*The inspeXtor includes a rack mounted server which provides redundancy for all lighting policies, as well as the ability to control single components separately, via a unique tagging protocol.*
PoE switch	*Powered by CISCO*
Cable to direct PoE load	*Direct CAT5e connection from power source (Cisco)*
	Fitted with sensors and connected by low-voltage, category 5/6 cable, MHT smart lighting solutions are connected to the internet, plug and play and data capable right out of the box.
Direct PoE load	*MHT Lighting PoE NODE* *Model No. MHTi-ND-60* *Features:* *POE++ enabled lighting control node* *Cisco UPOE compatible with 52.7 Watts Class 4 response* *Up to 51 Watts power supply* *[...]* *Internal Power consumption…….. 0.5 Watts* *[...]* *IEEE POE standard…….. 802.3at*
	LED TROFFER MHTi-VOL-SC SERIES [...] *Complete with Integrated Sensor [...]* *Max Wattage [...] 52W*
	LED DOWN LIGHT MHTi-DL-SC SERIES [...] *Driver 25W Max [...]*
Cable to indirect PoE load	*LED TROFFER MHTi-VOL-SC SERIES [...]* *Category Cable*
	LED DOWN LIGHT MHTi-DL-SC SERIES [...] *Category Cable [...]* *Wire Harness to Connect Up To Four Fixtures Per Port*
Indirect PoE load	*inspeXtor- LED Driver* *Model No. MHTi-DR-60* *General Specifications:* *Drives LED fixtures up to 52 Watts* *[...]* *Responds to MHTi™ based communication network* *[...]* *Off mode power consumption…… 0.05 Watts*
	LED DOWN LIGHT MHTi-DL-SC SERIES [...] *Complete with Non-Integrated Sensor*

[45] http://mhtlighting.com

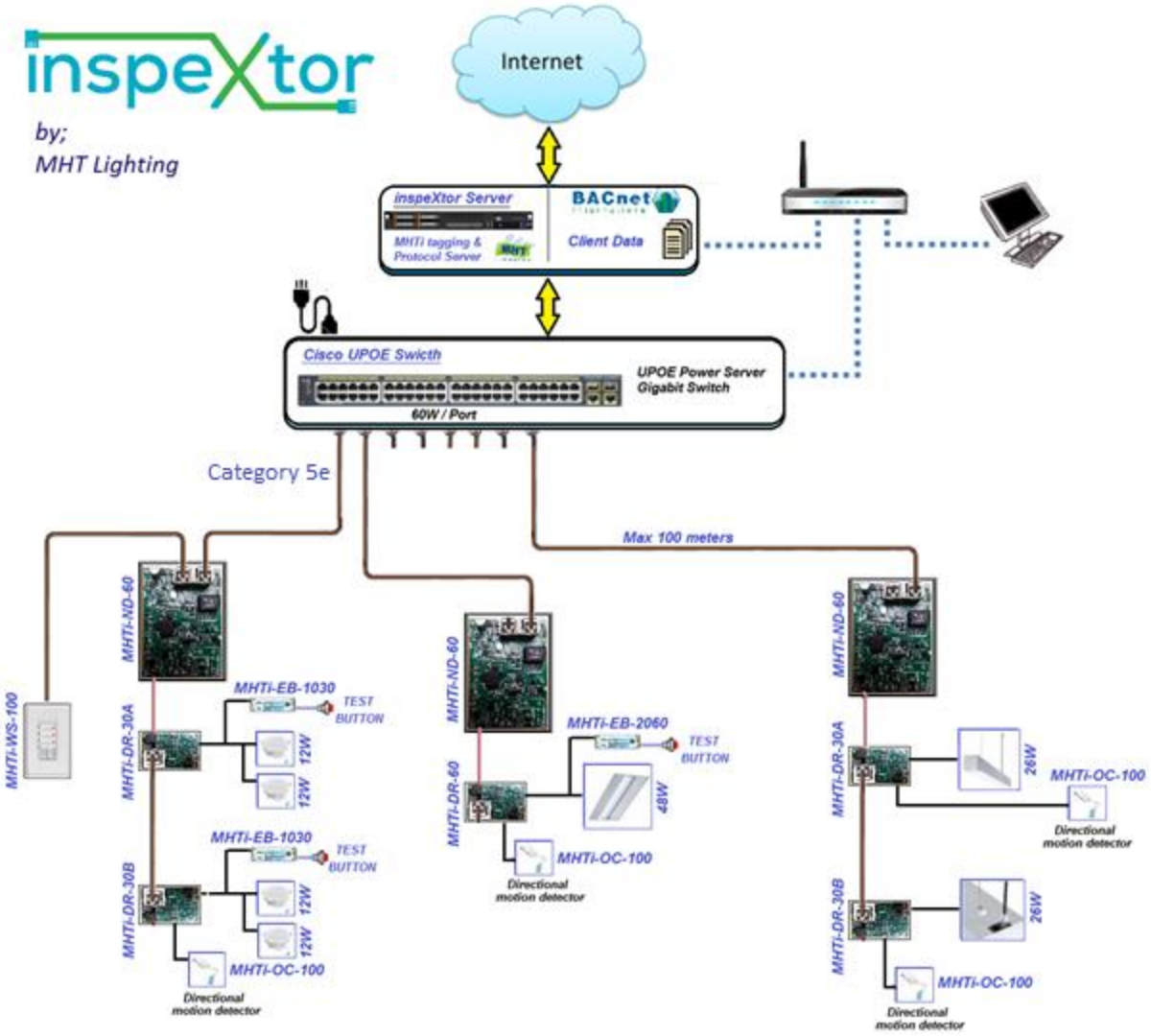
inspeXtor
by;
MHT Lighting
Internet
inspeXtor Server
MHTi tagging & Protocol Server
BACnet
Client Data
Cisco UPOE Switch
UPOE Power Server Gigabit Switch
60W / Port
Category 5e
Max 100 meters
MHTi-WS-100
MHTi-ND-60
MHTi-DR-30A
MHTi-DR-30B
MHTi-EB-1030
TEST BUTTON
12W
MHTi-OC-100
Directional motion detector
MHTi-ND-60
MHTi-DR-60
MHTi-EB-2060
48W
MHTi-OC-100
Directional motion detector
MHTi-ND-60
MHTi-DR-30A
MHTi-DR-30B
26W
MHTi-OC-100
Directional motion detector

Molex[46]

Energy reporting	*Transcend® Smart LED Driver Series [...] Integrated Power Monitoring [...] Provides individual energy consumption feedback for each luminaire*
	The applications feed sensor data to a central host so you can measure real-time energy consumption, air quality, temperature and more for increased operational efficiency.
	The network communication is based on CoAP and will allow an easy convergence of IP infrastructure securely thanks to Cisco technology.
PoE controller	*At the heart of the Transcend system, the PoE Gateway distributes power and connects luminaries, sensors and other devices to the Transcend manager [...] The Transcend Lighting Software Tool-set provides support during the complete lifecycle of a smart lighting control system, from design and installation to live operation and building maintenance.*
PoE switch	*Each Gateway is connected to a Cisco® Catalyst switch port with a Category Cable, capable of receiving 60 watts using four pairs.*
Cable to direct PoE load	*While CAT 5e, 24-gauge cable is the minimum that can be specified for a PoE lighting system, as a best practice we recommend CAT 6, 23-gauge.*
Direct PoE load: "PoE Gateway"	*The Transcend Gateway is a Cisco Universal Power over Ethernet (UPoE) compliant device. [...]* *UPoE IEEE802.3bt (compatible with PoE/PoE+) [...]* *Input: IEEE802.3at/bt*
	The Transcend interface is optimized to deliver low voltage power and reliable communication with lights, sensors and other devices.
	It can aggregate data from the Transcend sensor node, wall dimmers and other local controls.
	Nominal Power Input 60W
	Standby Power Consumption 0.5W
Cable to indirect PoE load	*The driver is powered and physically connected by the Transcend POE Gateway with a rugged and reliable Transcend harness cable using a Molex Micro-Fit 4-pin connection.*
	The Transcend System is also designed to optimize power/data distribution and minimize the number of PoE ports. Daisy-chain fixture-to-fixture is implemented with the Transcend Harness Device to Device.
Indirect PoE load: driver, luminaire, etc.	*If the power requirement for a group of devices is below 50W, a single Transcend PoE Gateway can power and control multiple drivers in a daisy-chain configuration*
	Transcend® 2x2 LED Troffer Series [...] 42W

[46] http://www.transcendled.com/

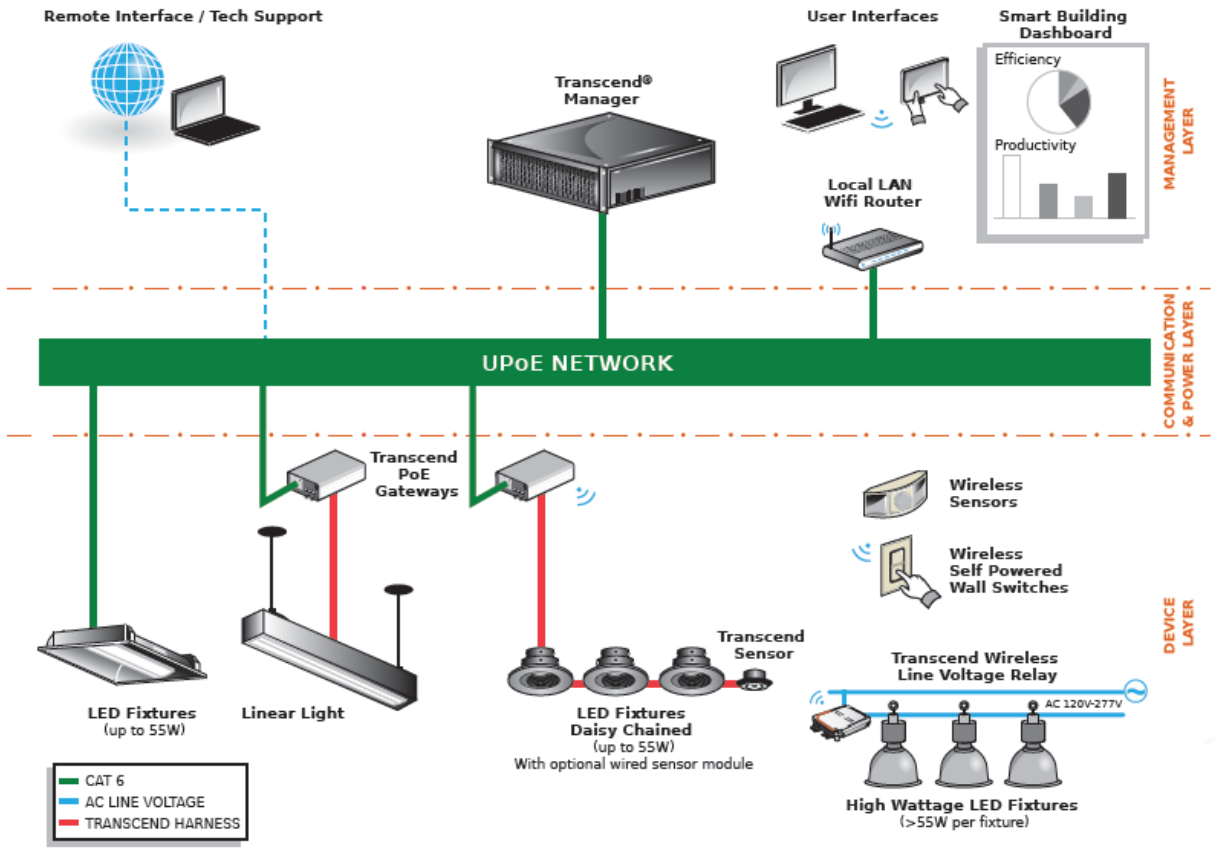
Remote Interface / Tech Support
User Interfaces
Smart Building Dashboard
Efficiency
Productivity
Transcend® Manager
Local LAN Wifi Router
MANAGEMENT LAYER
UPoE NETWORK
COMMUNICATION & POWER LAYER
Transcend PoE Gateways
Wireless Sensors
Wireless Self Powered Wall Switches
DEVICE LAYER
Transcend Sensor
Transcend Wireless Line Voltage Relay
AC 120V-277V
LED Fixtures (up to 55W)
Linear Light
LED Fixtures Daisy Chained (up to 55W) With optional wired sensor module
High Wattage LED Fixtures (>55W per fixture)
CAT 6
AC LINE VOLTAGE
TRANSCEND HARNESS

NuLEDs[47]

Energy reporting	*networked PoE lighting enables [...] Measurement and verification (M&V) of energy savings for each luminaire and sensor on the system [...] The use of telemetry and analytics to save energy and optimize space utilization*
	NuLEDs Power over Ethernet (PoE) intelligent lighting controls plug into a standard Ethernet switch, and is controlled through management software by NuLEDs or one of our partners.
	Network Management [...] *Cisco EnergyWise* *Joulex Energy Manager* *NuLEDs NuPAC*
PoE controller *	
PoE switch	*Power Supply: PoE, PoE+, UPOE*
Cable to direct PoE load	*The SPICEbox™ is powered from the PoE switch through CAT5e or CAT6 cables, and provides up to 60Watts of 12-36VDC power to lighting fixtures over 2 or 4 wire connections.*
Direct PoE load: "SPICEbox"	*The future of the LED lighting industry has arrived with nuLEDsSPICEbox™, the PoE Control Module that delivers the power and management capabilities to your LED fixtures. Each SPICEbox™ is a network device with a unique MAC address and IP address. SPICEboxes have multi-channel control for separate lighting loads, including color mixing. A SPICEbox™ can serve as a sensor host for wall switches, PIR sensors, ambient light sensors, or other sensors.*
	SPICEbox™ PoE Control Module [...] *Watts: Power Port up to 60 Watts [...]* *Additional Options: 2 Sensor Ports* *Load Configuration: 4 Channels (RGBW or 4 channels of Single Color)*
Cable to indirect PoE load †	*Wall Controller PoE Control Module [...]* *Wiring: Category 5e or 6 Ethernet cable to EIP SPICEBox*
	ALS Module Ambient Light Sensor [...] *Wiring: Category 5e or 6 Ethernet cable to EIP SPICEBox*
	PIR Module Passive Infrared Motion Light Sensor [...] *Wiring: Category 5e or 6 Ethernet cable to EIP SPICEBox*
Indirect PoE load	*Wall Controller PoE Control Module [...]* *Watts: < 1 Watt [...]* *Daisy Chain: IN-OUT RJ45 Ports [...]*
	ALS Module Ambient Light Sensor [...] *Watts: .05 Watts [...]* *Daisy Chain: IN-OUT RJ45 Ports [...]*
	PIR Module Passive Infrared Motion Light Sensor [...] *Watts: .05 Watts [...]* *Daisy Chain: IN-OUT RJ45 Ports [...]*

* As shown in diagram below, management software accesses SPICEbox via VLAN connection.

[47] http://www.nuleds.com/

NuLEDs LIGHTING NETWORK

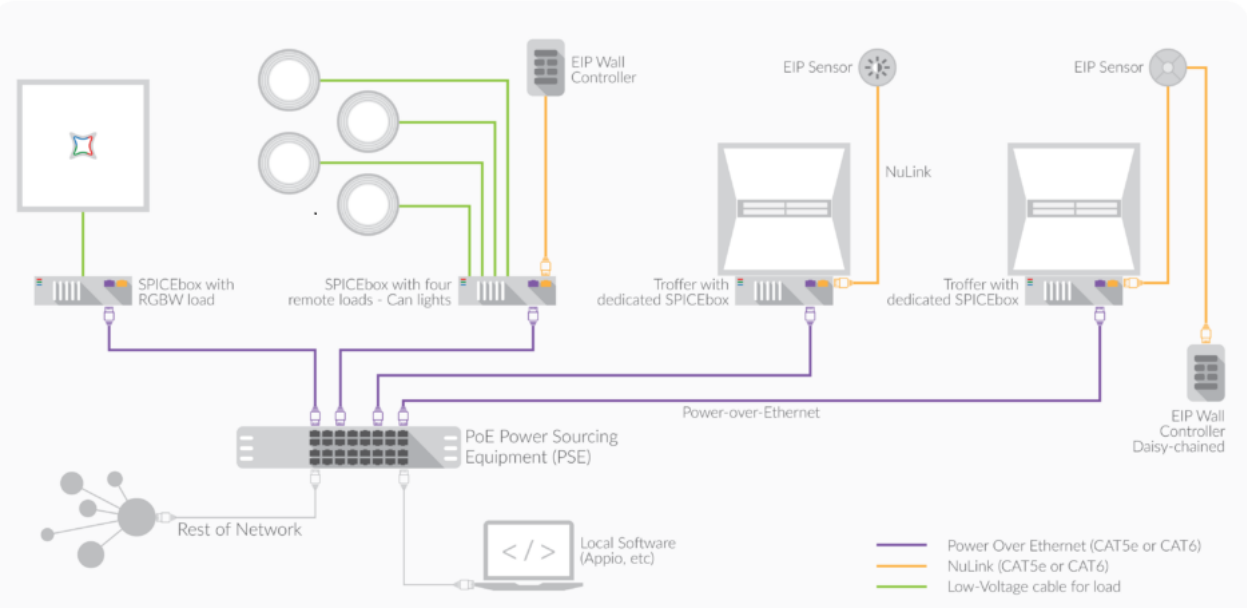

Philips[48]

Energy reporting	*Central management: Remotely and centrally monitor and manage all connected light points, energy consumption, and occupancy data via software*
	With the help of PoE technology not only power and data can be delivered for the luminaire over [...] a standard Ethernet cable but it also allows the lighting system to be merged with the IT system. Like a computer, each fixture has a unique network address for two-way Ethernet-based communications.
	With integrated sensors, connected luminaires become points of intelligence that share data on occupancy, activity patterns, and changes in temperature, humidity, and daylight levels
PoE controller	*EnvisionGateway manages the Ethernet connection between Philips connected lighting luminaires, Philips Dynalite devices and Philips EnvisionManager end user software. [...] Inbuilt web server — Allows for browser based control scenarios. [...] Inbuilt timeclock and schedule manager allow the user to manage operation and task scheduling*
PoE switch	*Standard IT switch: Provides power and data to the luminaires over a Ethernet cable*
	LCN5228 PoE switch [...] *Star or ring topology can be supported with Spanning tree configuration [...]* *PoE Output power per port (according IEEE802.3at standard: 30W – 34.2W) Max.: 32W [...]* *POWER-ETHERNET-MIB RFC 3621 [...]* *PoE (poeStatusTemp, poeStatusVoltage poeStatusCurrent all per port): Private MIB*
Cable to direct PoE load	*Power Over Ethernet (PoE): Power and data over the same Ethernet cable*
	The 10M/100M/1000M Ethernet ports on the Philips PoE switch use standard RJ 45 connectors of types: Cat5e/6/6A/7/7A conform AWG-24 – AWG-22. [...]When connecting ports to 10BASE-T- and 100BASETX-compatible devices, such as luminaires, and routers, it is allowed to use a four twisted-pair, straight-through cable wired for 10BASE-T, 100BASE-TX and 1000BASE-T (Alternative B according IEEE802.3at standard). Note: Be sure to use a four twisted-pair, Category 5 cable or higher when connecting to a 10M/100M/1000M BASE-T-compatible device.
	When connecting the switch to luminaires, straight-through cable-wiring must be applied.
Direct PoE load	*2EV EvoGrid recessed LED 2x2 with Power over ethernet (PoE) [...]* *SYS: PoE daylight and motion Detection [...]* *CAT6 RJ45 Connection*
	BoldPlay Direct/Indirect [...] *Integrated CAT5e cable allows for up to 24" drop between Luminaire and Canopy. Mounting canopy provides RJ45 connection point for PoE network. [...] Input Power: 22.2W [...] Standby power <0.9W*

[48] http://www.usa.lighting.philips.com/systems/connected-lighting-for-offices.html

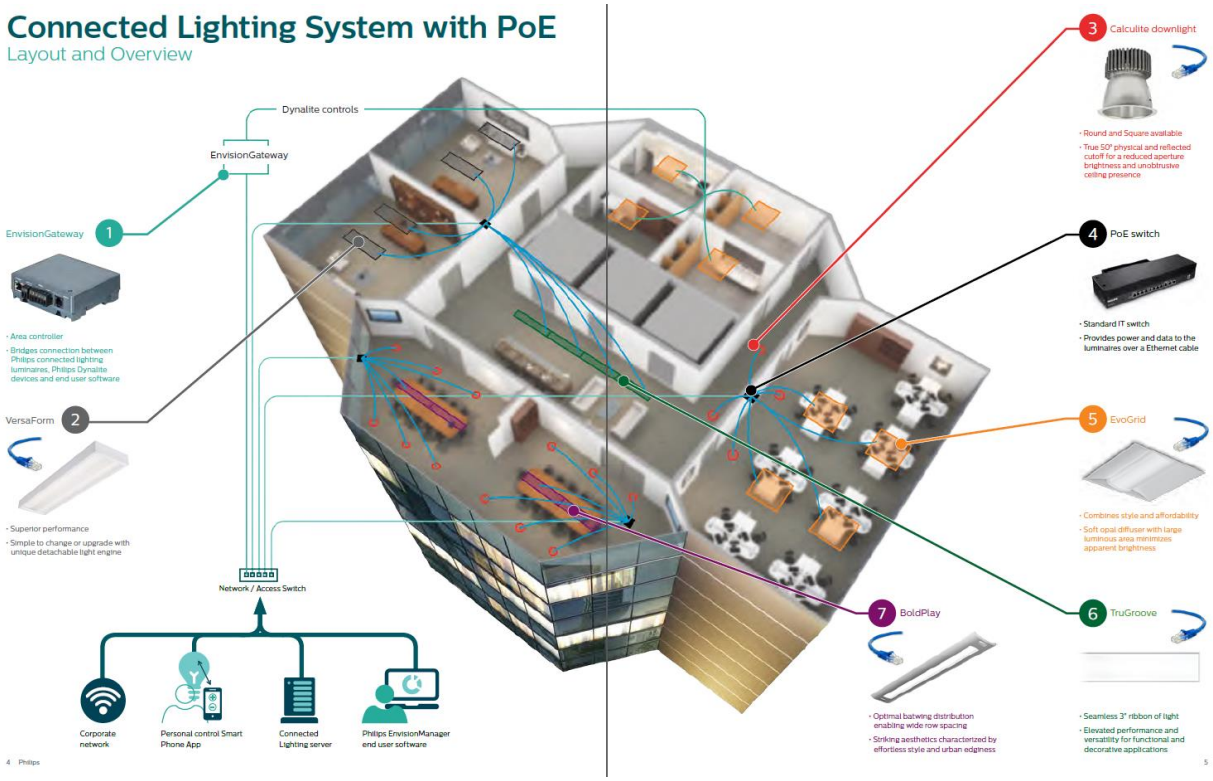
Connected Lighting System with PoE
Layout and Overview
Dynalite controls
EnvisionGateway
EnvisionGateway 1
· Area controller
· Bridges connection between Philips connected lighting luminaires, Philips Dynalite devices and end user software
VersaForm 2
· Superior performance
· Simple to change or upgrade with unique detachable light engine
Network / Access Switch
Corporate network
Personal control Smart Phone App
Connected Lighting server
Philips EnvisionManager end user software
4 Philips
3 Calculite downlight
· Round and Square available
· True 50° physical and reflected cutoff for a reduced aperture brightness and unobtrusive ceiling presence
4 PoE switch
· Standard IT switch
· Provides power and data to the luminaires over a Ethernet cable
5 EvoGrid
· Combines style and affordability
· Soft opal diffuser with large luminous area minimizes apparent brightness
7 BoldPlay
· Optimal batwing distribution enabling wide row spacing
· Striking aesthetics characterized by effortless style and urban edginess
6 TruGroove
· Seamless 3' ribbon of light
· Elevated performance and versatility for functional and decorative applications
5

Platformatics[49] and PoE Illumination[50]

Energy reporting	*By converging lighting onto an IT communication backbone, it's easy to add lights, sensors and other devices needed to collect business relevant data. [...] Platformatics Highlights: [...] Per light real-time energy monitoring, dimming and tuning **
	*Lights work with existing network management and energy monitoring tools **
	*The Platformatics system is comprised of LED light fixtures, intelligent PoE nodes, sensors, wall switches, area controllers, Ethernet switches, and cloud based applications. [...] **
PoE controller	*The Platformatics Area Controller [...] The PAC is a server that houses the Platformatics Software, and acts as a security and provisioning gateway for the system. [...] The Platformatics Software can be accessed through any desktop, laptop, or phone. **
PoE switch	*B-Tech Reduced Lighting Electric Use Over 70% [...] The system was powered by a Cisco Catalyst 3850 UPoE Ethernet Switch. **
	*The Ethernet switch provides power to the lighting system and serves as the communication hub for the PAC. **
Cable to direct PoE load	*CAT5E+ Ethernet Cable **
Direct PoE load	*The Platformatics node supports multiple LED lights, device discovery, granular dimming, sensors, and full RGB control. **
	Each of our lights, from architectural tunable troffers (used in commercial offices) to parking garage lights, is designed and thoroughly tested with Platformatics' nodes and Cisco UPOE Ethernet switches. †
	This fixture supports full PoE (Power over Ethernet) integration and is designed to work with Platformatics' Intelligent lighting system. †
	This fixture runs at 6 Watts †
	This fixture runs at 50 Watts †
Cable to indirect PoE load	*18-20 Gauge Wire* ‡
Indirect PoE load	*Many of our lights share a common Ethernet cable. While our high power downlights and floods require 50 watts on a dedicated cable, our latest parking garage light produces 1800 lumens and consumes only 12 watts. This allows customers to power and control 4 lights on a single Ethernet run.* †

* Excerpts from Platformatics.
† Excerpts from PoE Illumination.
‡ The diagram below indicates indirect PoE loads wired in parallel do not use Ethernet cabling.

[49] http://platformatics.com/
[50] http://poeillumination.com/

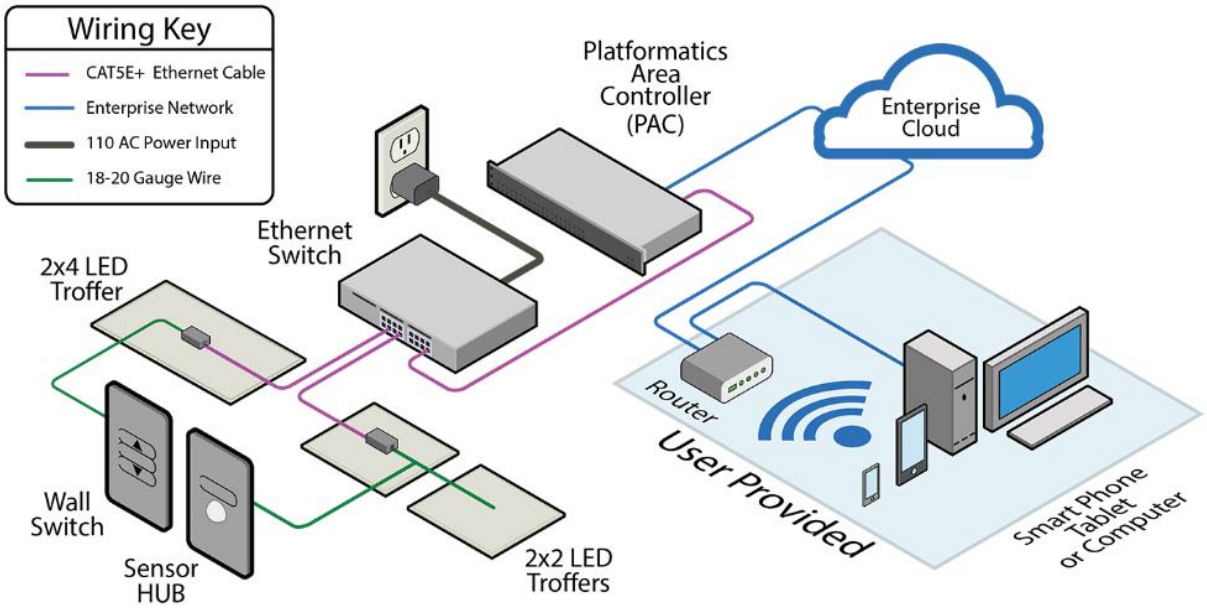
Wiring Key
CAT5E+ Ethernet Cable
Enterprise Network
110 AC Power Input
18-20 Gauge Wire
Platformatics Area Controller (PAC)
Enterprise Cloud
Ethernet Switch
2x4 LED Troffer
Router
User Provided
Smart Phone Tablet or Computer
Wall Switch
Sensor HUB
2x2 LED Troffers

References

ANSI. 2010. ANSI C12.20-2010. American National Standard for Electricity Meters—0.2 and 0.5 Accuracy Classes. Rosslyn: NEMA (National Electrical Manufacturers Association).

ANSI. 2014. ANSI ESVP Progress Report - Standardization Roadmap for Electric Vehicles, Version 2.0. Washington: ANSI (American National Standards Institute).

ANSI. 2015. ANSI C82.16-2015. American National Standard for Light-Emitting Diode Drivers—Methods of Measurement. Rosslyn: NEMA (National Electrical Manufacturers Association).

ANSI. 2016a. ANSI C12.1-2014. American National Standard for Electric Meters—Code for Electricity Metering. Rosslyn: NEMA (National Electrical Manufacturers Association).

ANSI. 2016b. "PINS Corrections: BSR ICEA P-45-482-201x and BSR/NEMA ESM1-201x." *ANSI Standards Action*, September 23, 2016.

ASTM. 2005. ASTM D4566-05e1, Standard Test Methods for Electrical Performance Properties of Insulations and Jackets for Telecommunications Wire and Cable. West Conshohocken: ASTM (American Society for Testing and Materials) International.

ATIS. 2013. ATIS-0600015.03.2013. Energy Efficiency For Telecommunications Equipment: Methodology For Measurement And Reporting For Router And Ethernet Switch Products. Washington: ATIS (Alliance for Telecommunications Industry Solutions).

BPA. 2015. Energy Efficiency Technology Roadmap. Volume 4: Electronics. March 2015. Portland: BPA (Bonneville Power Administration).

Briggs, Jason. 2014. "Innovative Lighting and Igor develop PoE system to integrate lighting and controls." *LEDs Magazine*.

Carlson, Steven. 2014. "Why the industry needs a PoE Logo Program." *Cabling Installation & Maintenance Magazine*, October 6, 2014.

CE Pro. 2012. "NuLEDs Launches PoE Lighting Solution for LEDs." *CE Pro*.

CEC. 2013. Guidelines for California's Solar Electric Incentive Programs (Senate Bill 1), Fifth Edition. Sacramento: CEC (California Energy Commission).

Cisco. 2004. Power over Ethernet: Cisco Inline Power and IEEE 802.3af. White Paper. San Jose: Cisco Systems.

Cisco. 2008. Enhanced Power over Ethernet: Easier Deployment and Improved Mobility. San Jose: Cisco Systems.

Cisco. 2011. Cisco EnergyWise Design Guide. Updated: Sep 02, 2011. San Jose: Cisco Systems.

Cisco. 2012. Cisco IOS Release Notes for Cisco EnergyWise, EnergyWise Version 2.8. Updated:Aug 06, 2012. San Jose: Cisco Systems.

Cisco. 2014. Cisco Universal Power Over Ethernet: Unleash the Power of your Network. White Paper. San Jose: Cisco Systems.

Cisco. 2016a. Cisco Digital Ceiling: Powering New Experiences and Insights. White Paper. San Jose: Cisco Systems.

Cisco. 2016b. Network Powered Lighting Configuration Guide, Cisco IOS XE 3.7.0EX (Catalyst 3850 Switches). First Published: April 18, 2016. San Jose: Cisco Systems.

Cisco. 2017. Cisco Catalyst Digital Building Series Switches Data Sheet. San Jose: Cisco Systems.

Congdon, Herb. 2008. "568-C.0: The next generation of cabling standards." *Cabling Installation & Maintenance*, September 1, 2008.

CPUC. 2016. California Solar Initiative Program Handbook, February 2016. San Francisco: CPUC (California Public Utilities Commission).

Cree. 2016. Cree SmartCast PoE Technology: The Simplest, Most Intuitive Way to Get Intelligent Lighting. CAT/SSHT-C063 Rev. Date: 05/10/16. Durham: Cree.

Darshan, Yair, and Kousalya Balasubramanian. 2015. "Type 4 System Power Parameters Analysis." P802.3bt 4-Pair Power over Ethernet (4PPoE) March 2015 Meeting, Berlin, March 11, 2015.

Dewan, Shai. 2014. "Philips develops smartphone-controlled connected office lighting system." *LEDs Magazine*, March 27, 2014.

DOE. 2014. 2014-10-09 Energy Conservation Program: Test Procedures for External Power Supplies; Notice of proposed rulemaking. Washington: DOE (U.S. Department of Energy).

DOE. 2015. Appendix Z to Subpart B of Part 430—Uniform Test Method for Measuring the Energy Consumption of External Power Supplies. edited by DOE (U.S. Department of Energy). Washington: GPO (U.S. Government Publishing Office).

EMerge Alliance. 2016. "DC Metering TSC Formed." *dcConnect. Official Newsletter of the EMerge Alliance. IS004. Fall/Winter 2016 Edition*, November 2016.

EPA. 2013a. ENERGY STAR® Program Requirements, Product Specification for Telephony, Final Test Method, Rev. Nov-2013. Washington: US EPA (United States Environmental Protection Agency).

EPA. 2013b. ENERGY STAR® Test Method for Small Network Equipment. Final Test Method, Rev. Nov-2013. Washington: US EPA (United States Environmental Protection Agency).

EPA. 2014a. ENERGY STAR® Product Specification for Small Network Equipment Eligibility Criteria. Version 1.0, Rev. Oct-2014. Washington: US EPA (United States Environmental Protection Agency).

EPA. 2014b. ENERGY STAR® Product Specification for Telephony. Eligibility Criteria, Version 3.0, Rev. Oct-2014. Washington: US EPA (United States Environmental Protection Agency).

EPA. 2016a. ENERGY STAR Program Requirements for Large Network Equipment – Eligibility Criteria, Version 1.0. Washington: US EPA (United States Environmental Protection Agency).

EPA. 2016b. ENERGY STAR® Program Requirements, Product Specification for Large Network Equipment, Test Method, Rev. Jan-2016. Washington: US EPA (United States Environmental Protection Agency).

Ethernet Alliance. 2016. 2016 Ethernet Roadmap. Beaverton: Ethernet Alliance.

Halper, Mark. 2016. "Cisco marches into connected lighting with new partners and new PoE installations (UPDATED)." *LEDs Magazine*, February 17, 2016.

Halper, Mark. 2017. "Cisco stokes PoE lighting push with dedicated Ethernet switch, signs up Marriott " *LEDs Magazine*.

HDBaseT. 2011. Introduction to Power Over HDBaseT. HDBaseT Alliance.

ICEA. 2012. ICEA S-90-661, 2012 Edition. Category 3, 5, & 5e Individually Unshielded Twisted Pair Indoor Cables (With Or Without An Overall Shield) For Use In General Purpose And Lan Communication Wiring Systems Technical Requirements. Alpharetta: ICEA (Insulated Cable Engineers Association).

IEC. 1990. IEC 60603-7:1990, Connectors for frequencies below 3 MHz for use with printed boards, Part 7: Detail specification for connectors, 8-way, including fixed and free connectors with common mating features, with assessed quality. Geneva: IEC (International Electrotechnical Commission).

IEC. 2011. IEC 62301, Edition 2.0, 2011-01. Household electrical appliances - Measurement of standby power. Geneva: IEC (International Electrotechnical Commission).

IEC. 2015. Report to Council from the Council Board (CB) following its meeting in Minsk on 2015-10-14. Geneva: IEC (International Electrotechnical Commission).

IEEE. 1985. ANSI/IEEE Std 802.3-1985, IEEE Standards for Local Area Networks: Carrier Sense Multiple Access with Collision Detection (CSMAKD) Access Method and Physical Layer Specifications. New York: IEEE (Institute of Electrical and Electronics Engineers).

IEEE. 2000. IEEE Standard 1515-2000 - IEEE Recommended Practice for Electronic Power Subsystems: Parameter Definitions, Test Conditions, and Test Methods. New York: IEEE (Institute of Electrical and Electronics Engineers).

IEEE. 2003. IEEE Std 802.3af-2003 (Amendment to IEEE Std 802.3-2002, including IEEE Std 802.3ae-2002). IEEE Standard for Information technology--Telecommunications and information exchange between systems--Local and metropolitan area networks--Specific requirements. Part 3: CSMA/CD Access Method and Physical Layer Specifications. Amendment: DTE Power via MDI. New York: IEEE (Institute of Electrical and Electronics Engineers).

IEEE. 2009. IEEE Std 802.3at-2009 (Amendment to IEEE Std 802.3-2008). IEEE Standard for Information technology--Telecommunications and information exchange between systems--Local and metropolitan area networks--Specific requirements. Part 3: CSMA/CD Access Method and Physical Layer Specifications. Amendment 3: DTE Power via the MDI Enhancements. New York: IEEE (Institute of Electrical and Electronics Engineers).

IEEE. 2011. IEEE Std 802.3.1™-2011, IEEE Standard for Management Information Base (MIB) Definitions for Ethernet. New York: IEEE (Institute of Electrical and Electronics Engineers).

IEEE. 2013a. IEEE 802.3 4PPoE Objectives, Version 2.0. New York: IEEE (Institute of Electrical and Electronics Engineers).

IEEE. 2013b. IEEE Std 802.3.1-2013. IEEE Standard for Management Information Base (MIB) Definitions for Ethernet. New York: IEEE (Institute of Electrical and Electronics Engineers).

IEEE. 2015a. IEEE Std 802.3-2015. IEEE Standard for Ethernet. New York: IEEE (Institute of Electrical and Electronics Engineers).

IEEE. 2015b. IEEE Std 2030.1.1-2015. IEEE Standard Technical Specifications of a DC Quick Charger for Use with Electric Vehicles. New York: IEEE (Institute of Electrical and Electronics Engineers).

IEEE. 2015c. IEEE to Adopt the HDBaseT Standard for Ultra-High-Definition Digital Connectivity. In *News & Events: Press Releases*. New York: IEEE (Institute of Electrical and Electronics Engineers).

IEEE. 2016a. IEEE 802.3 Ethernet Working Group - 5 Criteria, Version 2.1. New York: IEEE (Institute of Electrical and Electronics Engineers).

IEEE. 2016b. IEEE P802.3bt D1.7 4-Pair Power-over-Ethernet 10th Task Force review comments, 5/4/2016. New York: IEEE (Institute of Electrical and Electronics Engineers).

IEEE. 2016c. IEEE P802.3bt D2.0 4-Pair PoE Initial Working Group ballot comments, 9/16/2016. New York: IEEE (Institute of Electrical and Electronics Engineers).

IEEE. 2016d. IEEE Std 525-2016, IEEE Guide for the Design and Installation of Cable Systems in Substations. New York: IEEE (Institute of Electrical and Electronics Engineers).

IES. 2008. IES LM-79-08. Approved Method: Electrical and Photometric Measurements of Solid-State Lighting Products. New York: IES (Illuminating Engineering Society).

IES. 2012a. IES LM-28-12. Approved Method: IES Guide for the Selection, Care and Use of Electrical Instruments in the Photometric Laboratory. New York: IES (Illuminating Engineering Society).

IES. 2012b. IES LM-82-12. Approved Method: Characterization of LED Light Engines and LED Lamps for Electrical and Photometric Properties as a Function of Temperature. New York: IES (Illuminating Engineering Society).

IES. 2017. "2016 Progress Report." *LD+A*, January 2017.

ISO. 1993. ISO/IEC Guide 98:1993. Guide to the expression of uncertainty in measurement (GUM). Geneva: ISO (International Organization for Standardization).

Jacobson, Julie. 2012. "LumenCache Launches End-to-End Low-Voltage LED Lighting." *CE Pro*, June 26, 2012.

Law, David. 2016a. "Liaison to ISO/IEC/JTC1 SC25 WG3. IEEE 802.3 Ethernet Task Force Informal Communication." January 21, 2016.

Law, David. 2016b. P802.3bt. Modification to a Previously Approved PAR for an Amendment. PAR Approval Date: 12-May-2016. New York: IEEE (Institute of Electrical and Electronics Engineers).

LEDs Magazine. 2010. "Redwood Systems brings network-powered approach to LED office lighting." *LEDs Magazine*, Mar 8, 2010.

Lunera. 2013. Lunera PowerHive: A LED DC Troffer and Controls Solution. Santa Clara: Lunera.

MHT. 2014. LED Down Light: MHTL-DL-RC Series. Rev Date: Apr-2014. Staten Island: MHT Lighting.

MHT. 2016. LED Down Light: MHTi-DL-SC Series. Rev: October 2016. Staten Island: MHT Lighting.

Microsemi. 2011. Understanding 802.3at: PoE Plus Standard Increases Available Power. Aliso Viejo: Microsemi Corporation.

Microsemi. 2016. Next-Generation PoE: IEEE 802.3bt. White Paper, Revision 1.0. Aliso Viejo: Microsemi Corporation.

Molex. 2016. Transcend PoE Gateway. Order No. 987651-4292. USA/0k/GF/2016.02. Lisle: Molex.

NCSL. 1997. ANSI/NCSL Z540-2-1997. U.S. Guide to the Expression of Uncertainty in Measurement. Boulder: NCSL (National Conference of Standards Laboratories) International.

NEMA-ICEA. 2013. ANSI/NEMA WC 66/ICEA S-116-732-2013. Standard for Category 6 and 6A, 100 Ohm, Individually Unshielded Twisted Pairs, Indoor Cables (With or Without an Overall Shield) for Use in LAN Communication Wiring Systems. Rosslyn: NEMA (National Electrical Manufacturers Association).

NuLEDs. 2016. The Power of Innovation - SPICEbox PoE Control Module. Carlsbad: NuLEDs.

Randy Ivans, Anthony Tassone. 2015. Fact-Finding Study on Powering Over Data Cables. Northbrook: UL (Underwriters Laboratories).

Redwood Systems. 2010. Redwood Engine Preliminary Product Specification. Fremont: Redwood Systems.

Redwood Systems. 2012. Redwood System Installation Guide, version 2.1. Fremont: Redwood Systems.

Redwood Systems. 2013. Engine 3 - Model 4834 Installation Instructions. Hickory: CommScope.

Shulman, Michael. 2015. Power over Ethernet Lighting – Evolution or Revolution? Northbrook: UL (Underwriters Laboratories).

Sifos. 2016a. PDA-602A. PoE Powered Device Analyzer. IEEE 802.3at Power-over-Ethernet. Product Overview. Tewksbury: Sifos Technologies.

Sifos. 2016b. PowerSync Analyzer Application Note. 4-Pair PSE Testing with the PSA/PSL-3102. 4-Pair PoE: Common Questions About 4-Pair PSE's Today. Tewksbury: Sifos Technologies.

Silvertel. 2012. Ag6700 230W Power Sourcing Module Datasheet V1.2 August 2012. Newport, UK: Silvertel (Silver Telecom).

Stewart, Heath. 2011. "LTPoE++ Extends PoE to 90W with Reliable and Easy-to-Use Standard." *LT Journal of Analog Innovation*, July 2011.

Strategen/Arup. 2014. Direct Current Scoping Study. Opportunities for Direct Current Power in the Built Environment. Prepared for Pacific Gas and Electric, on behalf of the Department of Energy Building Technologies Office. Washington: DOE (U.S. Department of Energy).

Strong, Wendell. 2017. Innovative Lighting's GENISYS Launches New Software Suite, Website. New York: Newswire.

Taylor, Barry N., Chris E. Kuyatt. 1994. NIST Technical Note 1297, 1994 Edition. Guidelines for Evaluating and Expressing the Uncertainty of NIST Measurement Results. Gaithersburg: NIST (National Institute of Standards and Technology).

Thomas, Brinda A., Inês L. Azevedo, and Granger Morgan. 2012. "Edison Revisited: Should we use DC circuits for lighting in commercial buildings?" *Energy Policy* 45:399-411. doi: http://dx.doi.org/10.1016/j.enpol.2012.02.048.

TIA. 1995. ANSI/TIA/EIA-568-A-1995, Commercial Building Telecommunications Cabling Standard. Arlington: TIA (Telecommunications Industry Association).

TIA. 2009a. ANSI/TIA-568-C.2, Revision C. Balanced Twisted-Pair Telecommunications Cabling and Components Standards. Arlington: TIA (Telecommunications Industry Association).

TIA. 2009b. TIA TSB-184, 2009 Edition. Guidelines for Supporting Power Delivery Over Balanced Twisted-Pair Cabling. Arlington: TIA (Telecommunications Industry Association).

TIA. 2016a. TIA-1152-A, Requirements for Field Test Instruments and Measurements for Balanced Twisted-Pair Cabling, November 10, 2016. Arlington: TIA (Telecommunications Industry Association).

TIA. 2016b. TIA Issues Call for Interest on new Project for Balanced Twisted-Pair Telecommunications Cabling and Components Standard In *TIA Press Releases*. Arlington: TIA (Telecommunications Industry Association).

UL. 2015a. Fact Finding Report on Power over Local Area Network Type Cables (4-Pair Data / Communications Cables) <with errata 1 revisions>. Washington: SPI (Society of the Plastics Industry).

UL. 2015b. UL 2108, Edition 2. Standard for Low Voltage Lighting Systems. Northbrook: UL (Underwriters Laboratories).

UL. 2015c. UL Issues First Limited Power (LP) Certification to General Cable's GenSPEED® Cables. Mark helps ensure safe and efficient thermal performance in high power (>60 watts) Power-over-LAN applications. In *NEWSROOM Press Releases*. Northbrook: UL (Underwriters Laboratories).

Warren, Carol. 2011. "Lunera Lighting reveals Redwood Systems-ready luminaires." *LEDs Magazine*, September 21, 2011.

Wright, Maury. 2016. "Eaton partners with NuLEDs on PoE technology for connected SSL." *LEDs Magazine*, July 26, 2016.

Ziegenfus, Scott. 2016. "Lighting with Power over Ethernet (PoE), an IT Convergence." LED Specifier Summit Northwest, Seattle, WA, September 22, 2016.